designclass
design | engineering | technology

ADVANCED HIGHER
GRAPHIC COMMUNICATION

PROJECT 01 · MISSION SUMMIT-X

CAD & ENGINEERING GRAPHICS

Model it. Draw it. Test it. Make it. The technical graphics you need for the Advanced Higher question paper and project — told through a mountain-rescue drone designed for Glen Coe.



COURSE NOTES

PUPIL BOOKLET

56.68° N · 5.10° W
GLEN COE

START HERE

00 HOW TO USE THIS BOOKLET

This booklet covers every **technical graphics** topic in the Advanced Higher Graphic Communication course specification apart from rendering (its own project). Read it alongside your CAD work: each idea is shown on one real product — the **SUMMIT-X** rescue drone — so you can open the same model and try it.

WHAT THE BOXES MEAN

FIELD NOTE
Background, extra detail and real-world practice.

KEY TERMS
Definitions to learn word-perfect for the question paper.

EXAM INTEL
How marks are won and lost, drawn from recent course reports.

COMMON ERROR
Mistakes candidates make — and how to avoid them.

MISSION TASK
Question-paper style questions with marks. Answers are in the DesignClass Teacher Zone.

TWO EDITIONS

The **print edition** has ruled answer lines. The **Type-in edition** has the same pages with answer boxes you can type into on a laptop or tablet.

FILES FOR THIS PROJECT

Download the SUMMIT-X pack from DesignClass: STEP files of the assembly and every part, STL meshes, the frame-plate DXF, IGES, a Fusion archive (.f3d), A3 drawings, renders and fonts.

CONTENTS

01	Creators, users, graphic types & techniques	6
02	Drawing standards, protocols & conventions	11
03	Sectional views & hatching	21
04	Tolerances, surface texture & datums	28
05	3D CAD modelling techniques	34
06	Simulation: FEA, CFD & mechanical animation	46
07	CAD/CAM & model information	56
08	Technical file formats	64
09	The built environment: plans & surveys	68
10	Exam technique & glossary	79

EXAM INTEL READ THIS FIRST

The question paper rewards answers that are **linked to the context** in the question. A correct fact that is not applied to the product, audience or drawing in front of you often scores nothing. Every Mission task in this booklet trains that habit.

WHERE THIS FITS

Rendering and illustration, graphic design and print, animation, project planning and graphic ownership are taught in the other three DesignClass Advanced Higher projects.

00 THE COURSE AT A GLANCE

TWO COMPONENTS, 180 MARKS

Advanced Higher Graphic Communication (SCQF level 7) is assessed by a **question paper** and a **project**. Each is worth 90 marks and 50% of your award, which is graded A–D on the total.

QUESTION PAPER

90
MARKS

2 h 30
ONE SECTION

Structured, context-based questions, some integrating content from across the course. About **30%** of marks are A-type (harder, for grade A) and about **50%** are C-type.

AREA ASSESSED	MARKS
Techniques and practices in technical and commercial/visual media graphics	21–25
Interpreting and justifying graphics in terms of purpose and audience needs	35–43
Use and impact of graphic communication technology	18–23
Graphic communication and our environment and society	9–14

PROJECT

90
MARKS

20
A3 PAGES MAX

An open brief you agree with your teacher, covering **both** technical graphics and commercial and visual media graphics.

SECTION	MARKS
Analysing the graphic brief and research	10
Graphic specifications (3 TG + 3 CVMG)	6
Technical graphics preliminary planning	7
CVMG preliminary planning	7
Graphic solution: technical graphics	25
Graphic solution: CVMG	25
Evaluating the solutions and the process	10

WHY THIS BOOKLET MATTERS FOR YOUR PROJECT

The **technical graphics** sections (bold above) are worth 32 of the project's 90 marks (35 with the 3 TG specification marks) and draw on chapters 02–08: complex models, component and assembly drawings with sections, enlarged and exploded views, tolerances, surface texture and simulations such as FEA and CFD. The 2025 and 2026 course reports noted that many candidates **left sections out of their component and assembly drawings** and so could not reach the higher marks.

SOURCE

Qualifications Scotland, *Advanced Higher Graphic Communication Course Specification*, version 4.0 (September 2026), and the 2025 and 2026 Advanced Higher Graphic Communication course reports.

MISSION BRIEF

SUMMIT-X

A guarded quadcopter that carries a thermal camera to find people on the mountains of Glen Coe — in cloud, wind and darkness.

THE CLIENT

The **Highland Search & Rescue Drone Unit** (a fictional organisation) flies drones to search steep, broken ground faster than a team on foot. It needs an aircraft that can work close to rock faces, survive a hard landing and be repaired at the roadside.

YOUR ROLE

You are the technical graphics team at a Scottish design consultancy. Engineers, machinists, print bureaus, the planning department and the rescue team all depend on **your** models and drawings.

DESIGN REQUIREMENTS

- Propellers fully guarded for flying close to terrain and people
- 450 mm wheelbase so it fits a rescue vehicle's kit locker
- Thermal camera pod with a clear forward view
- Arms and motor mounts replaceable with hand tools
- Light: every gram saved is flight time on the hill
- A new hangar and operations base on a sloping site near Glencoe village



450 mm
WHEELBASE

2.19 kg
MODELLED MASS

31
BODIES · 1 TOP-DOWN DESIGN

6
MANUFACTURING PROCESSES

00 MEET THE PRODUCT

SUMMIT-X ANATOMY

One top-down Fusion design holds every part. Each component was chosen to teach a different modelling technique, drawing convention and manufacturing process — and each appears in the chapters shown.



COMPONENT	MODELLED WITH	MADE BY	MATERIAL	CHAPTERS
Frame plates	2D profile, extrude, DXF export	Specialist CNC cutting (prototype: laser-cut acrylic)	3 mm carbon composite	02 05 06 07 08
Arm ×4	Loft (rounded rectangle → circle)	Moulding	Carbon-fibre-reinforced polymer	03 04 05 06 07
Motor mount ×4	Extrude, holes, R4 and variable fillets, chamfer, threads	CNC milling	6061-T6 aluminium	02 03 04 05 06 07 08
Propeller ×4	Loft through rotated aerofoil sections	Injection moulding	PA12 nylon	05 06
Prop guard ×4	Revolve, fillets, struts	SLS 3D printing	PA12 nylon	03 05 06 07 08
Canopy	Loft with three rails, shell	SLS 3D printing	PA12 nylon	02 05 06 07 08
Thermal camera pod	Revolve, Boolean slice, add and subtract	Bought-in housing	PC/ABS	05
Landing gear	Sweep along a U-shaped path	Rod bending	Aluminium rod (Ø10)	05 06

FIELD NOTE

SUMMIT-X is a teaching design. Its masses come from the Fusion model's materials (e.g. motor mount 90.9 g, whole drone 2.19 kg), so treat them as modelled values, not test results.

01

CHAPTER 01

CREATORS, USERS, GRAPHIC TYPES & TECHNIQUES

Every technical graphic is made by someone, for someone. Before you draw a single line for SUMMIT-X you need to know who will use it, what they need from it, and which technique will get that information to them best.

LEARNING INTENTIONS

- Know the roles and needs of the people who create and use technical graphics
- Interpret audience requirements for preliminary, production and promotional graphics
- Compare and evaluate manual, digital and combined graphic techniques and technologies

SUCCESS CRITERIA

- I can explain exactly what a named user needs from a specific technical graphic
- I can choose a graphic type and technique for an audience and justify my choice
- I can evaluate techniques such as 3D scanning, CAD and physical modelling

CREATORS AND USERS

1.1 WHO READS A TECHNICAL DRAWING?

A technical graphic has done its job only when its reader can act on it without asking a question. The **creator** produces the graphic; the **user** reads it to make, check, approve or explain something.

ROLE	WHAT THEY NEED FROM TECHNICAL GRAPHICS	ON SUMMIT-X
Manufacturing engineer plans how a part is made: process, machines, tooling, sequence, inspection	Complete, unambiguous production drawings and the 3D model: material, tolerances, surface finish, datums and quantity.	MOTOR MOUNT CNC milled from 6061-T6 bar; needs the Ø18 H7 bore tolerance and datums to plan set-ups.
Mechanical engineer designs and analyses load-bearing and moving parts	Assembly drawings, fits and tolerances, FEA results and mechanical animations.	ARM CLAMP Checks that the clamp slot and pinch bolt grip the arm without overstressing the mount.
Electronic & electrical engineer designs circuits, wiring, power and control	Circuit and wiring diagrams, PCB layouts and the 3D assembly to check cable routes and clearances.	FRAME Routes motor and battery cables through the 50 × 30 cable slot in the frame plates.
Civil engineer designs roads, earthworks, drainage and foundations	Site plans, topographical and drainage surveys, levels and sections through the ground.	SUMMIT BASE Designs the access road and storm drainage for the hangar site (chapter 09).
Structural engineer makes sure structures carry their loads safely	General arrangement drawings, loads, member sizes, connection details, materials; FEA.	HANGAR & FRAME Sizes the hangar frame; checks the drone's frame plates for a hard landing.
CAD technician turns ideas into accurate models and drawings	Clear sketches and specifications, BS 8888, company templates, layer and file-naming protocols.	CAD MODEL Builds the Fusion model and BS 8888 drawings from the team's sketches.
Designer generates and develops ideas that meet the brief	Fast, expressive sketches, simple 3D models and renders to test ideas; user feedback.	CANOPY Develops canopy forms that shed rain and reassure a casualty.
Manufacturer makes the part: machinist, fabricator, print bureau	Sizes from datums, tolerances, material, finish and quantity — plus CAM-ready files (STEP, DXF, STL).	CNC SHOP Needs the PCD 25 and the M3 × 6 thread depth, not a render.
Model-maker builds prototypes and presentation models	Scaled drawings, surface developments, STL files for 3D printing, and colour and finish information.	PROP GUARD 3D prints a guard to check fit before the SLS batch is ordered.
End user or client commissions, pays for and uses the product	Clear, non-technical renders, pictorials and animations with key sizes and performance.	DRONE UNIT Wants to see its size, how it is carried up a hill and how fast a battery is swapped.

FOR THE PROJECT YOU MAY ALSO NEED TO CONSIDER

Designers; consultants & engineering trades	Civil, structural, electrical, mechanical and systems specialists need drawings of their own system and how it meets everyone else's.	**Fabricators**	Cutting lists, DXF profiles, bend and weld details for parts made from sheet and section.
Test labs	Test specifications, loads and the FEA/CFD predictions to compare with real results.	**Materials technologists**	Loads, environment (wet, -10 °C on the hill) and material callouts to approve or improve.
Specification engineers	Performance criteria and standards to write the product specification.	**Suppliers; production & planning**	Parts lists, part numbers, quantities and assembly sequences to order stock and schedule work.

EXAM INTEL DESCRIBE A NEED

Name the **information** and **why that user** needs it: "the machinist needs the Ø18 bore tolerance so the arm is a sliding fit" gains a mark; "needs to know what to make" does not. Built-environment users are in **chapter 09**.

1.2 GRAPHIC TYPES
PRELIMINARY, PRODUCTION, PROMOTIONAL

Graphic types are defined by **purpose** and **audience**. As a product or publication moves through design, manufacture and marketing, the audience changes — so the graphic must change with it.

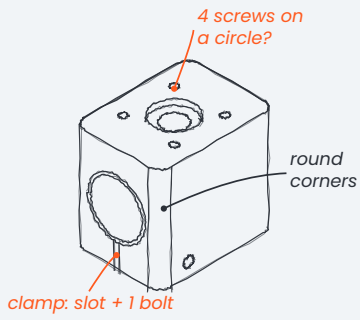

PRELIMINARY — DESIGN

Audience: the design team, engineers, the client at concept reviews.

Requirements: speed, options and annotation to explore and share ideas. Precision is not expected.

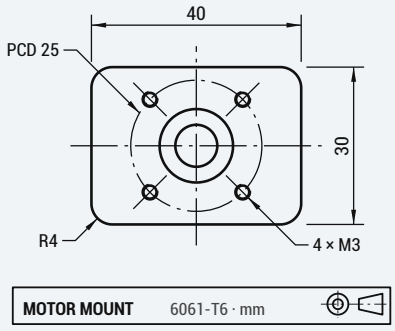

PRODUCTION — MANUFACTURE

Audience: manufacturing engineers, machinists, fabricators, CAM software.

Requirements: complete, accurate information drawn to standards — one meaning only.



PROMOTIONAL — MARKETING

Audience: the client, funders, volunteers, the public.

Requirements: visual impact, realism and a clear message — no technical clutter.

Fig 1.1 The SUMMIT-X motor mount and drone across the three graphic types: concept sketch, production drawing (dimensions shown are a selection), promotional render.

SAME PART, TWO READERS

	CNC MACHINIST — PRODUCTION DRAWING	RESCUE-TEAM LEADER (CLIENT) — PROMOTIONAL RENDER
Question	"Exactly what do I make, and how do I check it?"	"Will this help my team, and can I persuade funders?"
Needs	Every size from a datum, tolerances (Ø18 H7), material 6061-T6, thread depths, finish, quantity	Overall size and look, how it is carried and launched, key facts (2.19 kg, thermal camera)
Format	BS 8888 drawing + STEP file for CAM; often printed for the workshop	Render, short animation or AR on a tablet; poster or slide
Fails if…	a size is missing or could be read two ways	it is cluttered with dimensions and jargon

AN EFFECTIVE GRAPHIC RESPONSE IS…

- **fit for its audience** — their knowledge, their question
- **complete for its purpose** — nothing missing, nothing spare
- **in the right format** — digital or hard copy, size, file type
- **to the right standard** — BS 8888 for production work

PRODUCTS AND PUBLICATIONS

A publication goes through the same stages: thumbnails and layout sketches (preliminary), print-ready artwork and proofs (production), then posters and social posts that sell it (promotional). Publications are taught in the DesignClass Graphic Design project.

1.3 TECHNIQUES
MANUAL, DIGITAL — AND BOTH

GRAPHIC TYPE	MANUAL TECHNIQUES	DIGITAL TECHNIQUES
Preliminary	Freehand pictorial and orthographic sketches, exploded thumbnails, marker and pencil rendering, card or foam sketch models	Sketching apps with layers, quick 3D CAD block models, sketching over photographs, simple animations of a mechanism
Production	Instrument drawing on a drawing board; dimensioned freehand sketches for a quick workshop job or a site survey	2D CAD; drawings generated from the 3D model; DXF/STEP/STL files and CAM toolpaths sent straight to machines
Promotional	Marker and coloured-pencil illustrations, hand-built presentation models	Photorealistic renders, animations and fly-throughs, augmented reality, DTP layouts

CREATIVE TECHNIQUES WITH INSTRUMENTS AND DEVICES



Graphics tablet / pen display
Pressure-sensitive stylus, layers and undo. Sketch the canopy over a screenshot of the frame; import it into CAD.



Digital (smart) pen
Ink pen that records each stroke as a vector as you draw on paper — ready to edit or trace in software.



Scanner
Captures hand sketches to trace, colour or share; line work can be vectorised for CAD or a laser cutter.



Visualiser
Document camera showing sketches and models live — for a remote review with the Drone Unit in Glencoe.



3D scanner
Captures an existing object as a mesh: scan a rescue stretcher, then design the drone around it.



AR / mediated reality
Places the 3D model in a live camera view: the client sees SUMMIT-X full size in the hangar.

COMBINING MANUAL AND DIGITAL

1 · Sketch
Freehand ideas for the canopy on paper — fast and fluid

2 · Capture
Smart pen, scanner or visualiser brings the sketch into software

3 · Trace
Insert as a canvas; trace the side and plan profiles as CAD sketches

4 · Model
Loft the sections along the profiles; test, refine and render

5 · Present
Annotate a render by hand, or place the model in AR for the client

EVALUATING TECHNIQUES AND TECHNOLOGIES

TECHNIQUE	STRENGTHS	LIMITATIONS
Freehand sketching	Fast, cheap, anywhere; ideal for exploring and sharing early ideas	Not accurate or to scale; hard to edit; depends on skill
2D CAD	Accurate, standardised, easy to edit and share; DXF drives laser and vinyl cutters	Each view drawn separately, so views can disagree; no 3D check of fit
3D CAD	One model gives every view, sections, mass, simulation and CAM; changes update the drawings	Slower to start; software and training cost; drawings still need checking
Technical animation	Shows assembly, motion and clearances to non-experts	Time to produce and render; can hide real-world tolerances
3D scanning	Captures complex existing shapes quickly — reverse engineering	Mesh needs cleaning; limited accuracy; shiny or dark surfaces scan badly
Physical modelling	Can be held and tested for size, grip and fit; persuasive for clients	Slow and costly to change; a 3D-printed prototype is not the final material

QUICK CHECK 1.3

1 A model-maker will 3D print a test prop guard from the finished CAD model.

State the graphic type of the file _____ and its file format _____ 2

1.4 MISSION TASK
RIGHT GRAPHIC, RIGHT READER

MISSION TASK 1 **RIGHT GRAPHIC, RIGHT READER · 10 MARKS**

The SUMMIT-X concept has been approved. Your team must now send graphics to **Morven**, a CNC machinist at a precision engineering firm in Aberdeen, and to **Iain**, team leader of the Highland Search & Rescue Drone Unit (the client), who must win support from volunteers and funders.

1 Morven will machine the motor mount from the production drawing.

(a) Describe **two** needs Morven has from the production drawing.

2

(b) Explain why a photorealistic render of the mount would **not** meet Morven's needs.

2

2 Iain will present SUMMIT-X at a public fundraising evening in Fort William. State a graphic type **and** a technique he should use. Explain your choice with reference to his audience.

3

3 The team needs an accurate CAD model of the bought-in 2810 motor to check clearances inside the prop guard. Compare 3D scanning the motor with modelling it in CAD from measurements.

3

02

CHAPTER 02

DRAWING STANDARDS, PROTOCOLS & CONVENTIONS

How engineers make one drawing mean exactly one thing to everyone who reads it — from the CAD technician who draws the motor mount to the machinist who cuts it.

LEARNING INTENTIONS

- Apply BS 8888 and third-angle projection, view types, line types and dimensioning conventions
- Understand how scale, detail, layout, measurement, layers, materials and tolerances vary with context

SUCCESS CRITERIA

- I can choose and draw the right view, line type and dimension for a feature
- I can explain how layers let one CAD model serve different users
- I can find and correct errors on a production drawing

STANDARDS, PROTOCOLS AND CONVENTIONS

2.1 ONE DRAWING, ONE MEANING

A production drawing is an instruction that may be read by people who never meet its creator. **BS 8888** (Technical product documentation and specification) is the UK standard for engineering drawings: it calls up the international ISO standards for views, lines, dimensions, scales, title blocks and tolerances.

STANDARD

A published, agreed rule book that everyone works to — e.g. BS 8888 for engineering, British Standard symbols for building drawings.

PROTOCOL

An agreed procedure for producing and sharing drawings — drawing numbers, revision letters, file and layer naming, sign-off before issue.

CONVENTION

An accepted shorthand so a feature need not be drawn in full — thread lines, hatching, centre lines, the knurling pattern.

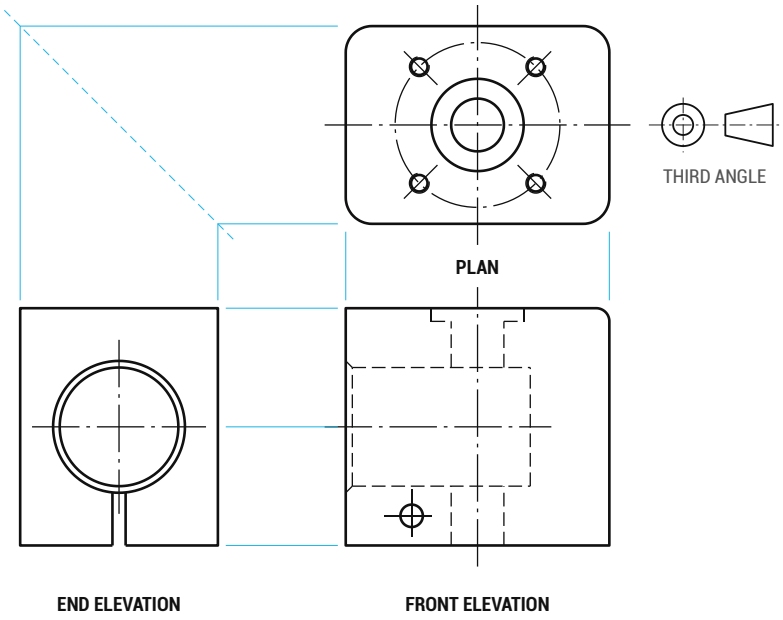

Fig 2.1 Motor mount in third-angle projection. Thin cyan lines show how the views line up; the 45° mitre transfers widths from the plan to the end elevation. Only the front elevation shows hidden detail (bore, shaft hole, counterbore); the plan shows the M3 tapped holes.

THIRD-ANGLE PROJECTION

Imagine looking at the mount **through** a glass box. Each view is drawn on the side of the box it is seen from:

- **plan** (from above) — **above** the front elevation
- view from the **left** — on the **left**
- view from the **right** — on the **right**

So the faces nearest each other in adjacent views are the same face. In **first angle** (common in mainland Europe) the positions are swapped: the plan goes below.

EXAM INTEL THE SYMBOL

BS 8888 accepts both methods, so the **projection symbol** must appear in the title block. For third angle the end view of the cone (two circles) is drawn on the **left** of its elevation — the same rule as the views.

THE TITLE BLOCK

PROJECTION 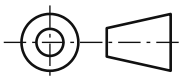	DRAWN BY (CREATOR) R.M.	LEGAL OWNER SUMMIT-X design team	DOCUMENT TYPE DETAIL DRAWING	DRAWING NO. SX-02-003
SCALE 2:1 / SIZE A3	CHECKED BY A.G.	TITLE **MOTOR MOUNT**		REVISION B
UNITS mm	APPROVED BY J.S.	MATERIAL 6061-T6 ALUMINIUM		SHEET 1 OF 1
	DATE OF ISSUE 2026-10-28	GENERAL TOLERANCE ±0,1 UNLESS OTHERWISE STATED		

Fig 2.2 Title block for the SUMMIT-X motor mount. The fields follow BS EN ISO 7200 (legal owner, document type, number, title, revision, dates, creator, approver) plus projection, scale, units, material and the general tolerance.

The drawing number and **revision letter** are a protocol: when the bore tolerance changes, the revision moves from B to C and the old print is withdrawn, so the workshop never machines from an out-of-date drawing.

2.2 VIEW TYPES
THE RIGHT VIEW FOR THE FEATURE

Elevations, plans and end elevations show a part square-on. When a feature is inclined, symmetrical or very small, BS 8888 offers views that show it more clearly — with less drawing.

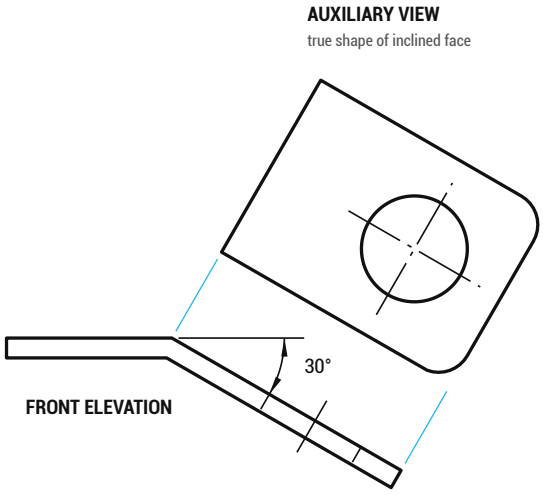

AUXILIARY VIEW

The tilt plate is at 30°, so in the elevation it appears edge-on and in a plan it would be foreshortened: the Ø16 hole would look like an ellipse. An **auxiliary view** is projected at 90° to the inclined face, so it shows the face's **true shape** — a true circle that can be dimensioned.

Only the inclined face is drawn: a **partial auxiliary view**. Projecting the foreshortened tab as well would add lines but no information.

Fig 2.3 Auxiliary view of a concept camera tilt bracket (3 mm plate).

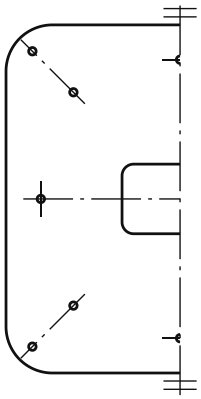

Fig 2.4 Half view of the 150 × 150 lower frame plate.

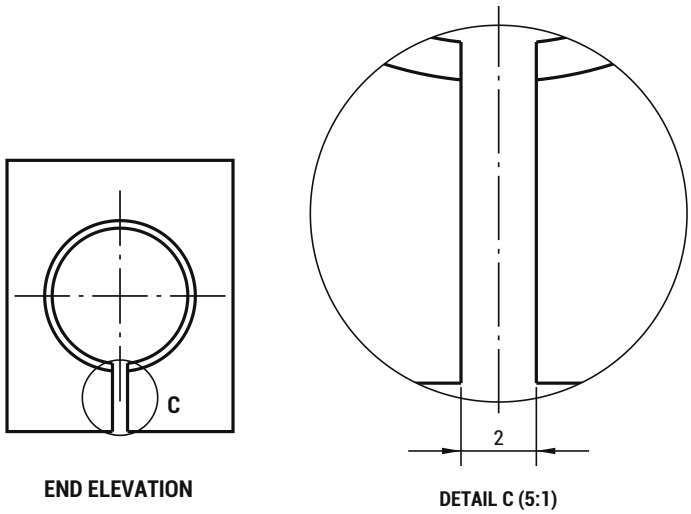

Fig 2.5 Enlarged detail of the 2 mm clamp slot on the mount's inner end.

PARTIAL (HALF) VIEW

The frame plate is symmetrical, so only half is drawn. The **symmetry symbol** — two short, thin parallel lines across each end of the centre line — says the other half is a mirror image. Partial views save time and space, and allow a larger scale.

ENLARGED DETAIL VIEW

At 1:1 the 2 mm slot is too small to dimension clearly. The area is ringed with a **thin continuous circle** and a capital letter; the enlarged view is labelled with the same letter and its scale, **DETAIL C (5:1)**. The dimension still states the **true size**, 2 — never the 10 mm it measures on paper.

QUICK CHECK 2.2

1 The SUMMIT-X canopy will carry an inclined badge panel. Name the view showing its true shape _____ 1

VIEW TYPES CONTINUED

2.2 ASSEMBLIES, EXPLODED AND PICTORIAL VIEWS

Component drawings say how to make each part. **Assembly** and **exploded** drawings say how the parts go together — and a **parts list** says what each part is.

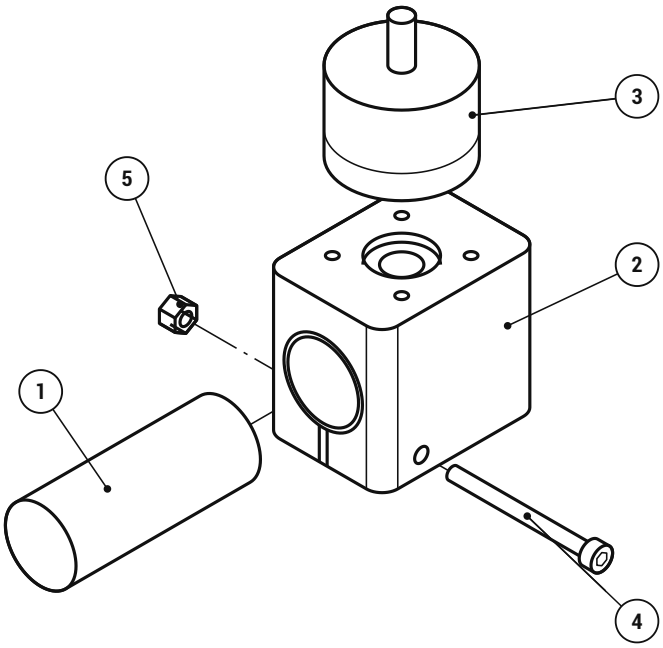

Fig 2.6 Exploded pictorial view of the SUMMIT-X arm-end sub-assembly with item balloons. Thin chain lines show the assembly paths. Arm shown shortened; motor fixings omitted for clarity.

BALLOONS AND PARTS LISTS

Each part carries an **item reference**: a number in a circle (balloon) with a thin leader ending in a **dot** on the part. The number links to a row in the **parts list**, normally placed above the title block.

ITEM	DESCRIPTION	MATERIAL	QTY
1	Arm	CFRP	1
2	Motor mount SX-02-003	6061-T6 Al	1
3	Motor 2810 (bought-in)	—	1
4	Socket head cap screw M3 × 35	Stainless A2	1
5	Nut M3, nylon insert	Stainless A2	1

ASSEMBLY OR EXPLODED?

An **assembly drawing** (general arrangement) shows the parts in their working positions: the fitter checks positions, fits and overall sizes. Sections are often used to show parts inside one another (chapter 03).

An **exploded drawing** pulls parts apart along the direction they are assembled, so the order is obvious. It suits assembly instructions, maintenance manuals and clients who cannot read orthographic views.

PICTORIAL VIEWS

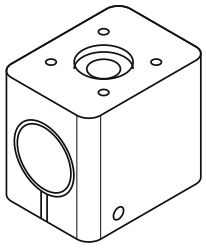

A small, undimensioned **pictorial** of the part is often placed in a free corner of a production sheet to help the reader recognise the shape. Planometric views suit interiors and site layouts; exploded pictorials suit assembly.

COMMON ERROR

Leader lines from balloons that end in an **arrow** on a surface, or cross each other. Item leaders end in a dot inside the part (an arrow only if it touches an edge), and balloons are lined up neatly round the drawing.

QUICK CHECK 2.2B

1 The Drone Unit's volunteers will replace damaged arms in the field. Explain why an exploded view would suit them better than an assembly drawing.

2

2.3 LINE TYPES
EVERY LINE HAS A JOB

Use the specification's line types. Only two thicknesses: **thick** for visible outlines, **thin** (about half) for the rest.

LINE	NAME	USED FOR — ON SUMMIT-X
———	**Outline**	Continuous **thick**: visible edges and outlines — the mount's outer profile.
———	**Projection line**	Continuous thin: projecting between views. Extension, dimension and leader lines and hatching are thin continuous too.
– – – – – – – –	**Hidden detail**	Dashed thin: edges you cannot see — the Ø18 bore inside the mount in Fig 2.1.
——— · ——— · ———	**Centre line**	Long dash, dot, thin chain: axes, centres of symmetry, pitch circles — the PCD 25. Stops 3–5 mm past the outline. Long dash, short dash (BS 7308) is also accepted.
——— · · ——— · · ———	**Fold line**	Thin long dash, double dot chain: folds on a surface development — the card insert for the drone's carry case.
A A	**Cutting plane**	Long-dash-dot thin, **thick at the ends** (and at changes of direction); arrows show the viewing direction; capital letters name the section. Sections are taught in chapter 03.

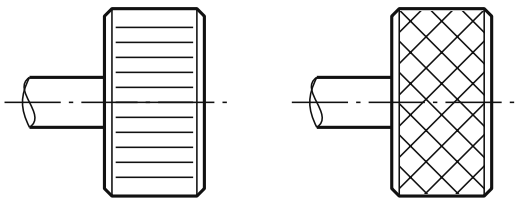

Fig 2.7 Knurling: straight and diamond, drawn with thin lines — e.g. a thumb screw a rescuer can turn with gloves on.

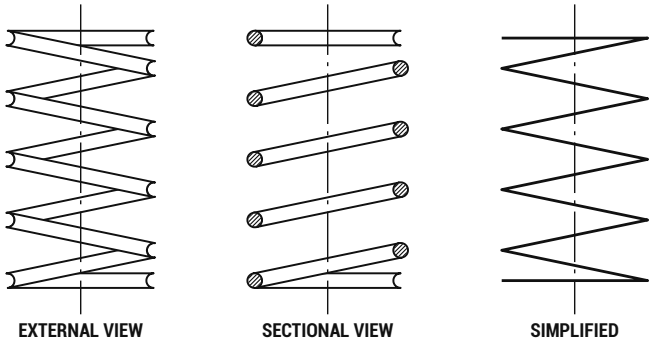

Fig 2.8 Compression spring: external view, sectional view (wire sections hatched) and simplified single-line view.

SCREW THREADS

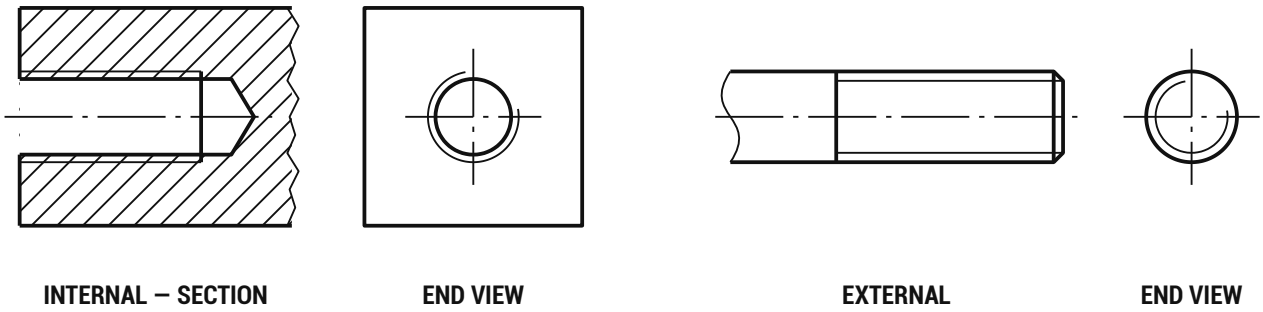

Fig 2.9 The mount's M3 tapped holes (internal) and the M3 pinch bolt (external), drawn at 4:1.

External thread: the major diameter (the crests you can touch) is **thick**; the minor diameter is **thin**; a thick line marks the end of the thread. In the end view the major Ø is a thick circle and the minor Ø a thin circle about three-quarters complete.

Internal thread: reversed — the tapping-drill (minor) Ø is **thick**, the major Ø thin, and hatching runs up to the thick line. M3 is tapped from a Ø2.5 hole; the drill point is drawn at about 120°.

DIMENSIONING CONVENTIONS

2.4 SIZES THAT CANNOT BE MISREAD

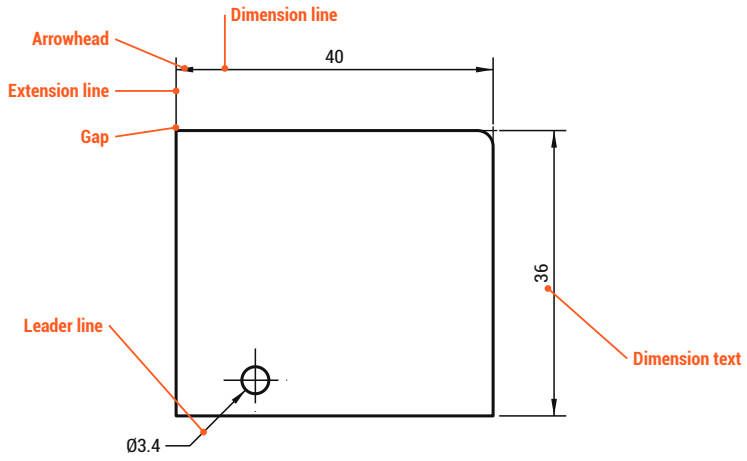

Fig 2.10 Parts of a dimension on the mount's front elevation (linear dimensions 40 and 36, leader to the Ø3.4 pinch-bolt hole).

THE RULES

- All sizes in **mm**; the unit is stated once, in the title block.
- Extension lines start with a small **gap** from a real edge and run about 2 mm past the dimension line.
- Text sits just above the line, centred, reading from the bottom or the right-hand side.
- First dimension about 10 mm from the outline, then about 6 mm between each; smaller sizes nearest the view so lines do not cross.
- In small spaces, arrows go outside the extension lines pointing in.
- Dimension to visible edges, not hidden detail; dimension to a centre only where it has a centre line.
- Each size is given once — no repeats, no closed chains.

CHAIN, PARALLEL OR RUNNING?

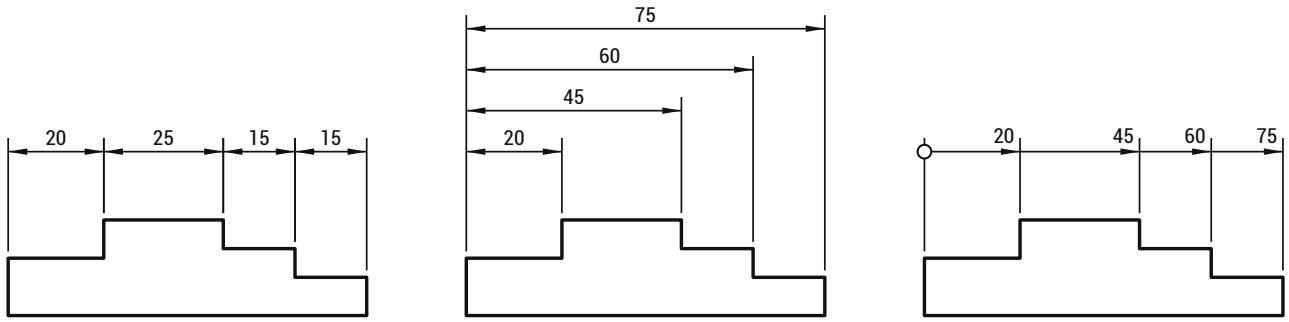

CHAIN

Each size runs from the last feature. Quick to read step sizes, but every tolerance **adds up** along the chain — the 75 end can drift.

PARALLEL

Every size runs from one **datum** face, so errors do not accumulate. Best for functional positions; needs more space.

RUNNING

Parallel dimensions superimposed on one line from the origin (small circle); values sit at each arrowhead. Saves space — popular for CNC set-ups.

Fig 2.11 The same stepped profile dimensioned three ways (from the specification appendix layouts).

EXAM INTEL EXPLAIN YOUR METHOD

Link the method to **function**: the SUMMIT-X frame's arm-bolt holes at 65 and 90 from the centre must line up with the arm, so dimension them in **parallel** from the centre datum — a chain would let errors build up.

QUICK CHECK 2.4

1 In Fig 2.11, does chain or parallel give the step at 60 more accurately? Give a reason.

2

COMMON ERROR — THE CLOSED CHAIN

Giving 20, 25, 15, 15 **and** the overall 75 sizes the same length twice: the overall cannot also be guaranteed. Leave out the least important chain size, or the overall.

2.4 DIMENSIONING CONTINUED
CIRCLES, ARCS, ANGLES AND SHAPES

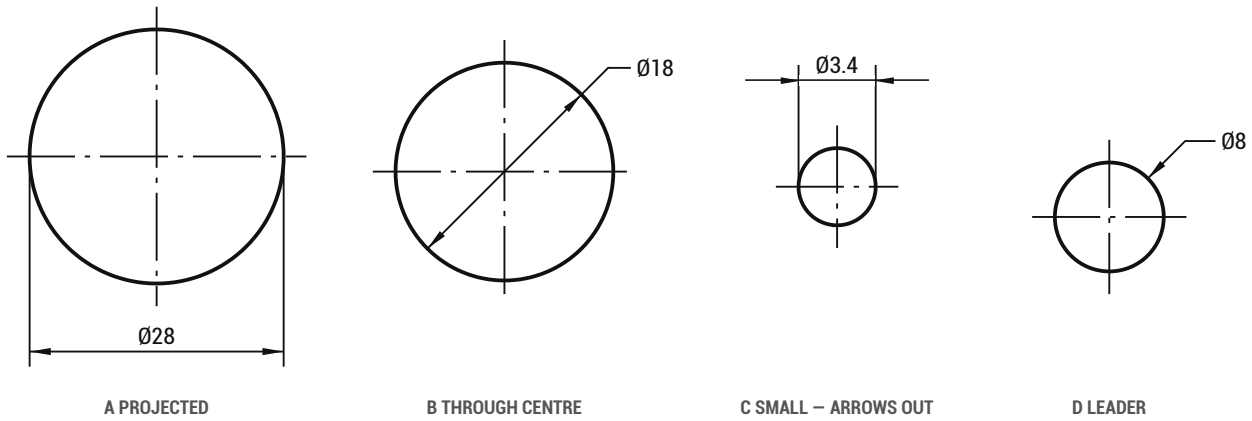

Fig 2.12 Four ways to dimension a diameter, using SUMMIT-X sizes: motor Ø28, bore Ø18, pinch-bolt hole Ø3.4, shaft hole Ø8. The symbol Ø always comes before the value.

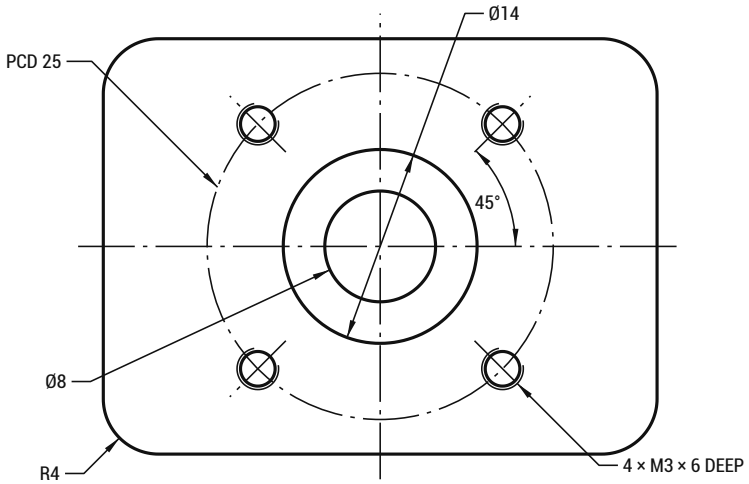

Fig 2.13 Mount plan: pitch circle diameter, angular position, hole note, diameters and radius.

PITCH CIRCLE DIAMETER (PCD)
Holes equally spaced round a circle are positioned by the **pitch circle** (thin chain) through their centres: **PCD 25**, with the leader arrow touching the pitch circle.

ANGULAR
An arc centred on the vertex, arrows touching both arms, value in degrees: the first hole is at **45°**.

HOLE NOTES
4 × M3 × 6 DEEP: number of holes, thread size and thread depth in one note, on a leader pointing at the centre.

RADIAL
Prefix **R**; the arrow touches the arc and the line points towards the arc's centre — here the **R4** corners.

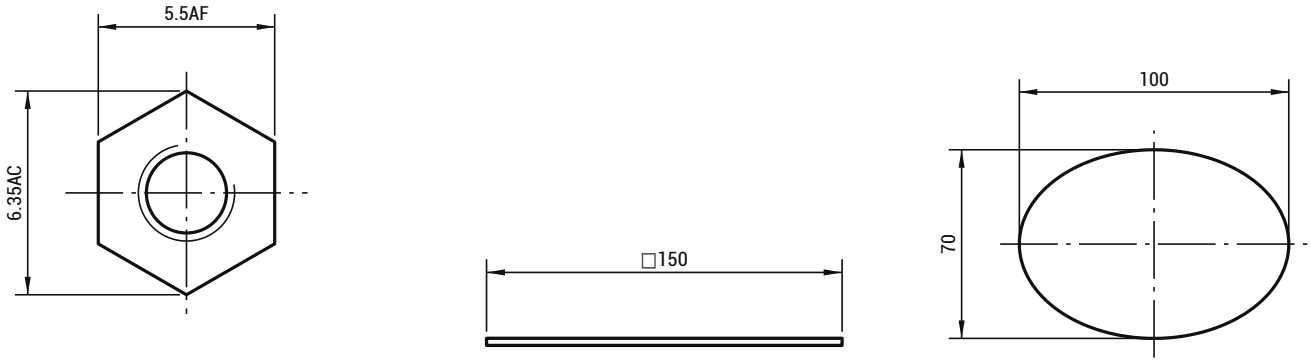

ACROSS FLATS / CORNERS
The M3 nut (item 5): **5.5AF** is the spanner size; **6.35AC** = 5.5 ÷ cos 30°.

SQUARE
The frame plate's elevation only shows 150 × 3. **□150** tells the reader it is 150 square, so no second size is needed.

MAJOR AND MINOR AXIS
The canopy's middle profile is an ellipse: major axis **100**, minor axis **70**, each between the ellipse's extreme points.

Fig 2.14 Across flats and across corners, square, and major/minor axis conventions.

2.5 DISPLAY VARIANCES
SAME RULES, DIFFERENT CONTEXTS

An engineering drawing of a 40 mm mount and a plan of a 30 m hangar follow the same principles — but scale, detail, layout, units, layers, materials and tolerances are displayed differently.

1 SCALE

CONTEXT	TYPICAL PREFERRED SCALES
Engineering	Enlarged 2:1, 5:1, 10:1 · full size 1:1 · reduced 1:2, 1:5, 1:10
Building	Location plan 1:1250 or 1:2500 · site plan 1:500 or 1:200 · floor plans 1:100 or 1:50 · details 1:20, 1:10, 1:5

The scale is stated in the title block (and beside any view at a different scale). Dimensions always give **true size**: the 2 mm slot drawn at 5:1 measures 10 mm but is dimensioned 2.

2 DETAIL

Detail shown depends on scale and user. At 1:100 a wall is two lines; at 1:20 its brick, cavity, insulation and block layers appear. On engineering drawings small features get an enlarged detail view.

3 LAYOUT

A-series sheets (A3 is usual for a component, A1/A0 for building plans); views in projection with even spacing; title block bottom right, parts list above it, general notes nearby.

4 MEASUREMENT

Engineering: millimetres, no unit written. Building: dimensions in mm, but **levels** in metres to three decimal places (e.g. +45.250) and site distances often in metres.

5 MATERIALS

Engineering drawings name the material in the title block or parts list and hatch sections (chapter 03). Building drawings show materials with the standard symbols:

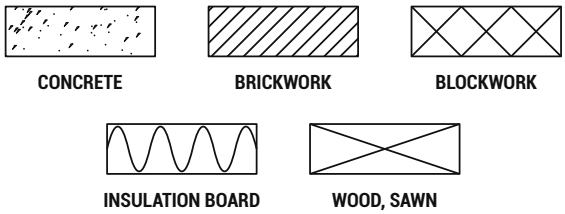

6 TOLERANCES

A **general tolerance** note covers every size (±0,1 unless otherwise stated); functional sizes carry their own, e.g. the Ø18 H7 bore. Machined parts work to hundredths of a millimetre; building setting-out to millimetres. Full detail in chapter 04.

7 LAYERING FUNCTIONS

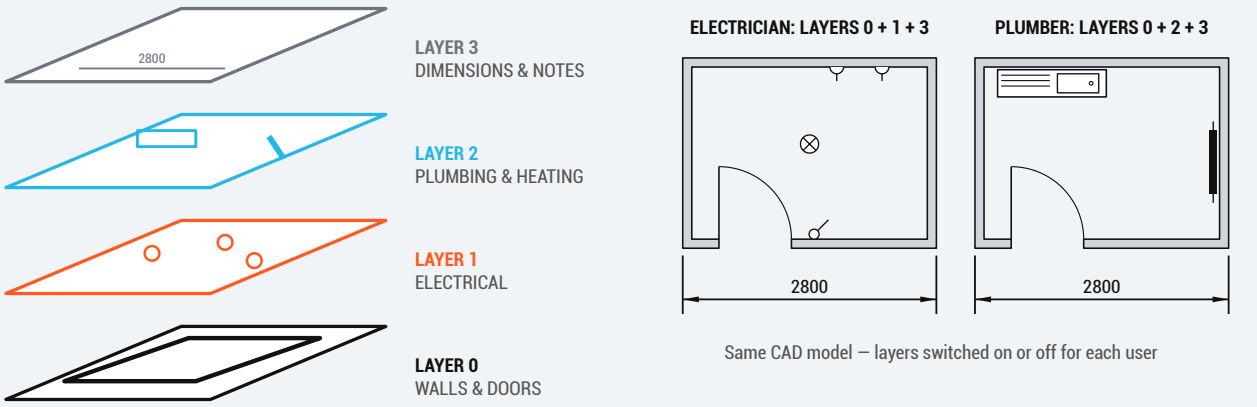

Fig 2.15 A simple kitchen plan. Each type of information sits on its own CAD layer; layers are switched on or off, locked, coloured and printed separately, so each trade gets an uncluttered drawing from one model.

Because every drawing comes from the same model, a moved wall updates the electrician's and the plumber's drawings at once. Layer names follow an agreed protocol so everyone in the team finds the same information in the same place.

QUICK CHECK 2.5

1 The 2 mm clamp slot is drawn in DETAIL C at 5:1. Width measured on the drawing _____ Value written on the dimension _____ 2

2.6 CHECKING DRAWINGS
ERROR HUNT: THE MOTOR MOUNT

A junior CAD technician has drawn the mount. The sheet is marked third angle. Eight errors are flagged. Errors 1–3 are explained for you — find and correct 4–8.

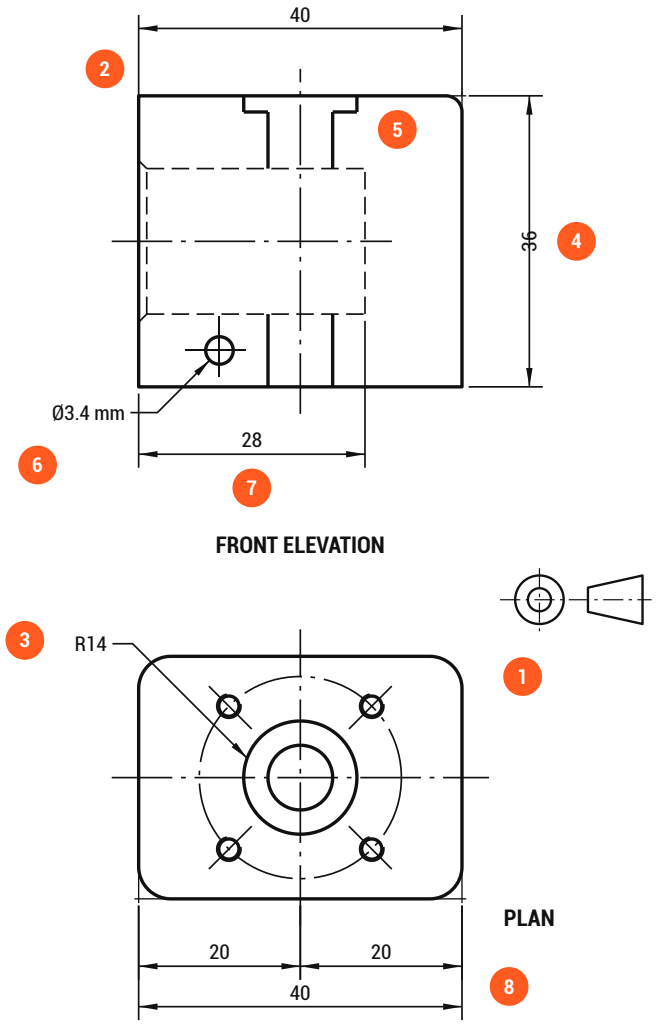

Fig 2.16 Motor mount drawing with eight deliberate errors (orange markers).

WORKED EXAMPLES

1. **Plan below the elevation.** That is first-angle layout, but the symbol says third angle. Plan must go **above**.
2. **Extension lines touch the outline.** Leave a small gap so they cannot be mistaken for part edges.
3. **R14 on the counterbore.** It is a full circle: **Ø14** (R7 would be its radius).

CHECK A DRAWING IN THIS ORDER

1. Projection: views in the right places? symbol correct?
2. Lines: thick/thin, hidden, centre lines past the outline?
3. Dimensions: complete, once only, gaps, text clear of lines?
4. Conventions: Ø, R, PCD, threads, symbols correct?
5. Title block: scale, units, material, tolerance, revision.

YOUR TURN DESCRIBE EACH ERROR AND HOW TO CORRECT IT

4 1

5 1

6 1

7 1

8 1

2.7 MISSION TASK
DRAWING THE MOTOR MOUNT

MISSION TASK 2 **DRAWING THE MOTOR MOUNT · 12 MARKS**

The motor mount (Fig 2.1) is about to go to the CNC shop. You are the CAD technician checking its drawing.

1 **(a)** Sketch the projection symbol that must appear in the title block.

SKETCH

1

(b) State where the end elevation viewed from the **outer** end of the mount is placed.

1

2 Complete the plan below by adding, to BS 8888: the pitch circle diameter of the tapped holes; a note for the four M3 × 6 deep tapped holes; the R4 corner radius.

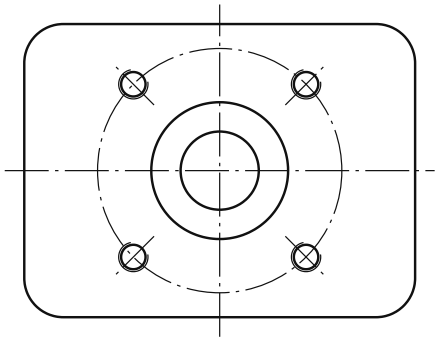

PLAN

3

3 Explain why the positions of features on the mount should be dimensioned in parallel from a datum rather than as a chain.

2

4 The SUMMIT Base building model has electrical and plumbing layers. Explain **two** benefits of layering to the contractors.

2

5 For the M3 tapped holes drawn in section, state which diameter is drawn with a thick line, and explain why.

3

03

CHAPTER 03

SECTIONAL VIEWS & HATCHING

Cut the SUMMIT-X motor mount open on paper and every bore, slot and thread inside it becomes as clear as its outline. Choose the right cut and the machinist reads the part at a glance.

LEARNING INTENTIONS

- Know how full, half, part, removed, revolved and stepped sections and cut-aways are drawn to BS 8888
- Understand when each type suits a feature of the part and the needs of the reader
- Apply the rules of hatching, including the parts that are never hatched

SUCCESS CRITERIA

- I can draw and label a cutting plane and its section correctly
- I can justify the choice of section for a component
- I can hatch an assembly and find errors in a sectional view

3.1 SECTIONAL VIEWS
CUTTING THE MOUNT OPEN

A **sectional view** draws a part as if an imaginary **cutting plane** has sliced through it and the piece nearest the viewer has been taken away. Internal features appear as crisp visible lines instead of a tangle of hidden detail.

HOW A SECTION IS DRAWN

01 **Cutting plane.** Thin long-dash-dot chain line, **thick at the ends** and at any change of direction. It may replace a centre line.

02 **Arrows** at each end show the **direction of viewing**, with a capital letter beside each arrow.

03 **Label** the view with the same letters: **SECTION A–A**. In third-angle projection the arrows point away from the sectional view.

04 **Hatch** only the solid material the plane passes through. Holes, slots and spaces are left clear.

05 Draw the **visible edges beyond** the plane. Hidden detail is normally left out of a section.

1. Cutting plane A–A on the bore axis. Arrows show that we look towards the back of the mount.
2. Hatching: solid aluminium cut by the plane.
3. The 2 mm clamp slot lies **on** the plane, so there is no material to hatch. We see the far wall of the slot with the Ø3.4 pinch-bolt hole in it.
4. Edges beyond the plane, such as the bore mouth with its 1 × 45° entry chamfer, the end of the bore, the Ø8 hole running into it and the counterbore floor.

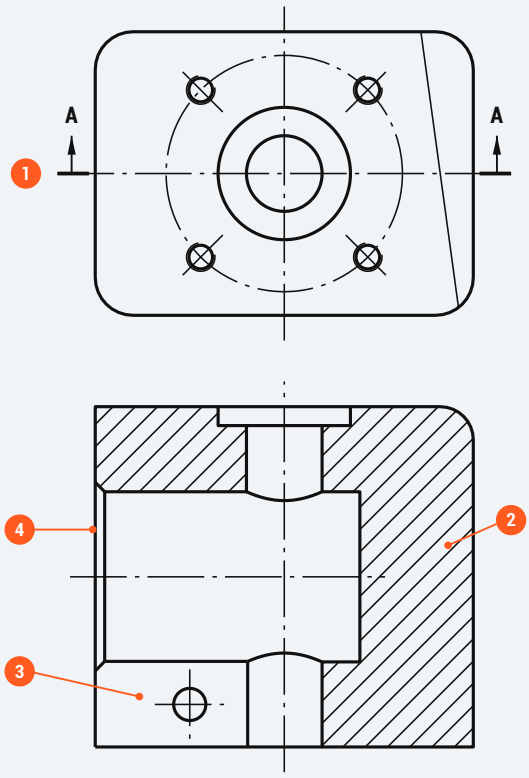

Fig 3.1 Plan with cutting plane A–A, and the full section of the SUMMIT-X motor mount (third angle)

FULL SECTION

WHAT The cutting plane passes right through the part.

WHEN Internal features lie on one plane and are the information that matters, or the part is not symmetrical.

WHY Section A–A shows the bore depth, the Ø8 motor-shaft hole meeting the bore, the counterbore and the clamp slot in one view: exactly what the CNC programmer and the inspector need.

EXAM INTEL **EXPLAIN YOUR CHOICE OF SECTION**

An **explain** answer links the choice to a **feature of the part** *and* to the **needs of the reader**, e.g. "A full section shows the blind Ø18 bore and the slot as visible lines, so the machinist can read the bore depth without decoding hidden detail."

QUICK CHECK 3.1

1 Explain why the clamp slot is not hatched in SECTION A–A.

2

3.2 HATCHING
RULES OF HATCHING

Hatching tells the reader "this is solid material cut by the plane". Used consistently, it also tells them which pieces belong to which part of an assembly.

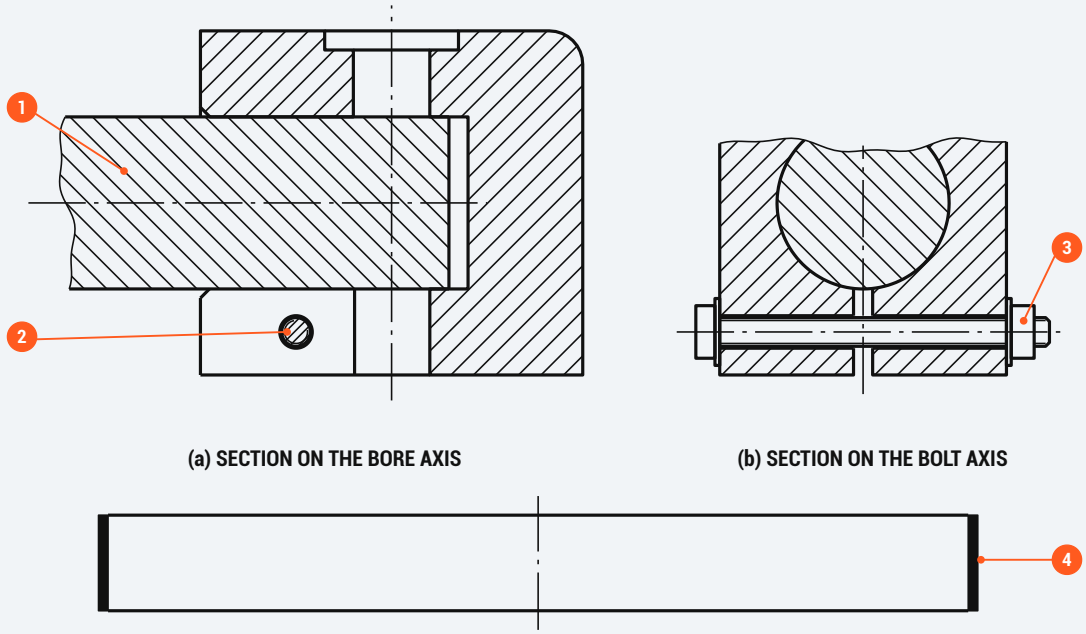

Fig 3.2 Hatching on the SUMMIT-X arm clamp. (a) Section on the bore axis with the arm fitted. (b) Section on the pinch-bolt axis, upper part broken away. (c) The 3 mm prop-guard wall cut through its axis.

- **Thin continuous lines**, normally at **45°**, evenly spaced (about 2–3 mm on a small part; wider on large areas).
- One part has the **same angle and spacing in every view** (both cut areas of the mount in Fig 3.1 match).
- **Adjacent parts** are hatched in **opposite directions** 1. A third part takes a different spacing.
- If 45° would run parallel or square to an important outline, use another angle such as 30° or 60°.
- **Thin sections** too narrow to hatch are filled solid 4.
- Large areas may be hatched only around their edges. Break the hatching to leave dimension text clear.

NOT HATCHED WHEN CUT LENGTHWAYS	
Fasteners	bolts, screws, nuts, washers, rivets 3
Shafts & pins	shafts, spindles, pins, keys
Thin features	ribs, webs, spokes
Bearings	balls and rollers

These parts have no internal detail to show, so hatching them would only clutter the drawing. Cut **across**, they are hatched like any other part 2: the bolt in (a) is cut across, so it is hatched; in (b) it is cut lengthways, so it is not.

QUICK CHECK 3.2

1 The arm and the mount in Fig 3.2(a) touch. State how the hatching shows they are separate parts.

_____ 1

3.3 HALF AND PART SECTIONS
INSIDE AND OUTSIDE AT ONCE

Not every view needs to be cut all the way through. A half section shows the inside and the outside of a symmetrical part together; a part section opens up just one small feature.

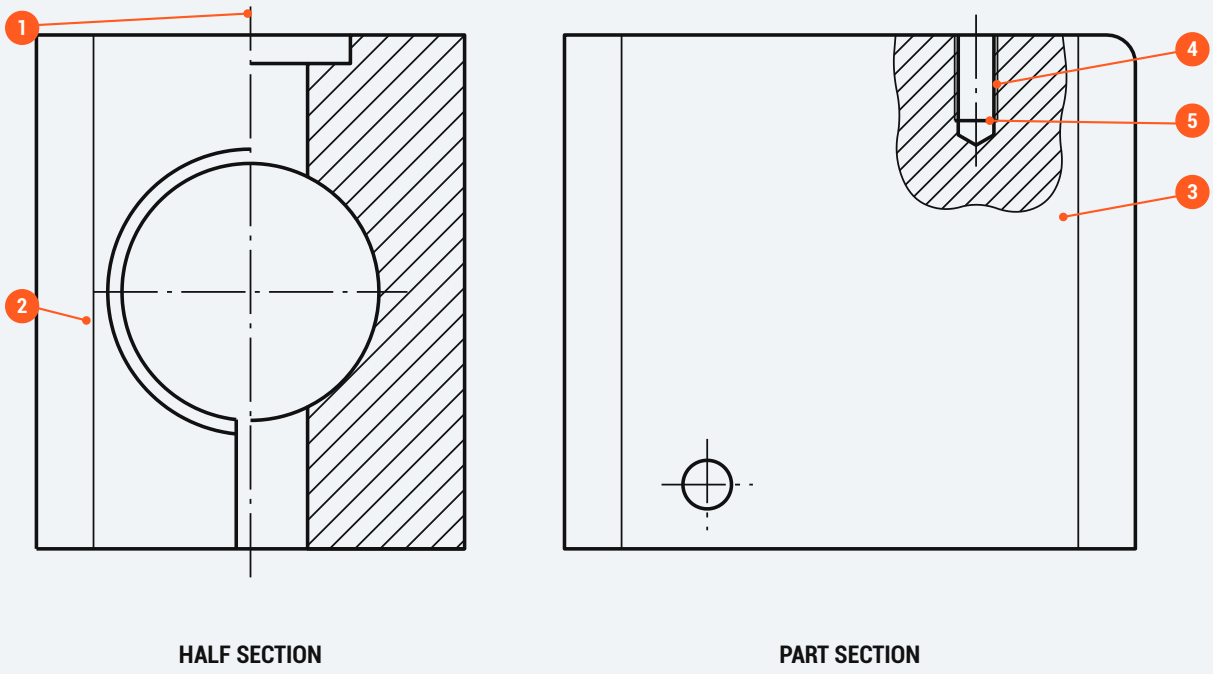

Fig 3.3 Left: half section of the mount, looking along the arm, cut on the motor axis. Right: front elevation with a part section through one M3 tapped hole.

HALF SECTION SYMMETRICAL PARTS

WHAT One half of the view is drawn in section and the other half as an outside view.

WHEN The part is symmetrical about a centre line in that view, and the reader needs both outside and inside.

WHY Looking along the arm, the mount is symmetrical. The outside half shows the slot entering the bore mouth; the cut half shows the Ø8 hole running through and the counterbore. One view replaces two.

1. The halves are divided by a **centre line**, never a thick line.
2. No hidden detail in the outside half: the cut half already shows the inside.

When the cutting plane is the obvious plane of symmetry it need not be drawn. Otherwise show it as for a full section.

COMMON ERROR

Drawing a thick line down the middle of a half section, or adding hidden lines to the outside half. Both suggest an edge or a feature that does not exist.

PART SECTION LOCAL FEATURE

WHAT A small area of an outside view is "broken out" to show one internal feature.

WHEN Only one local feature, such as a tapped or blind hole, needs explaining and a full section would lose outside detail.

WHY The thread depth (6) and drill depth (7) of the M3 holes are shown without cutting the whole view.

3. The boundary is a **thin freehand break line**. No cutting plane or label is needed.
4. Tapped hole: thread (major) diameter thin; drilled (minor) diameter thick. Hatching runs up to the thick line.
5. A thick line marks the end of the full thread; the drill point is drawn at 120°.

QUICK CHECK 3.3

1 Name the type of line that bounds a part section.

_____ 1

3.4 REMOVED AND REVOLVED SECTIONS
SHOWING A CROSS-SECTION

Sometimes the reader only needs the **shape of the cross-section** at one place. Removed and revolved sections show it without another full view.

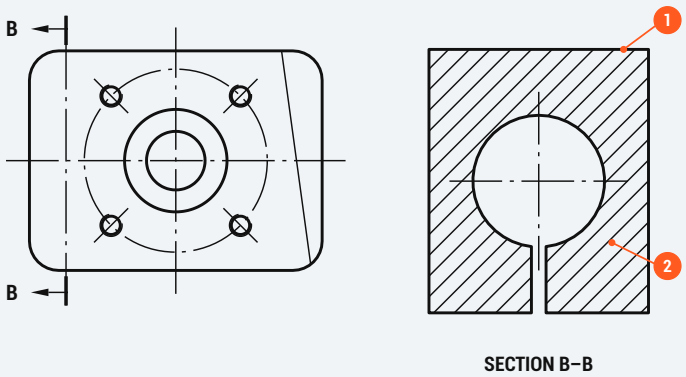

Fig 3.4 Removed section B–B through the clamp slot, 5 mm from the arm end

REMOVED SECTION

WHAT The cross-section is drawn **away from the view**.

HOW Cutting plane and arrows as normal; label **SECTION B–B**; **thick** outline. Place it near the plane; it may be drawn at a larger scale (state the scale).

WHY B–B shows the slot splitting the lower wall into the bore. That is how the pinch bolt can close the bore onto the arm.

1. Thick outline of the cut face.
2. Hatched like every other section of the mount.

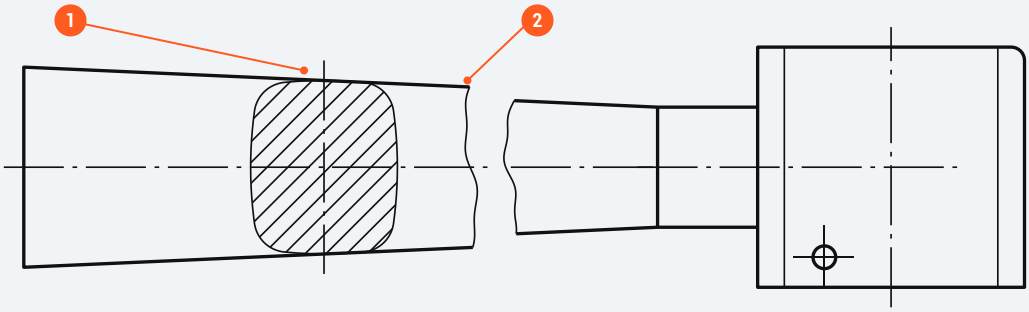

Fig 3.5 Arm (side view, interrupted) with a revolved section 100 mm from the frame centre, where the loft has blended to 22 × 26 mm

REVOLVED SECTION

WHAT The cross-section is turned through 90° and drawn **on the view itself**.

HOW **Thin** outline 1, hatched, no cutting plane or label. A centre line marks its position. The view may be broken either side instead 2.

WHY The arm is lofted from a 24 × 30 rounded rectangle to a Ø18 circle, so no single view shows its shape. A revolved section shows it exactly where it occurs.

	REMOVED	REVOLVED
Where	Away from the view	On the view
Outline	Thick	Thin
Labelled	Yes, SECTION B–B	No
Best for	Crowded views; enlarged detail	Long, simple parts: arms, spokes, ribs

QUICK CHECK 3.4

1 State **two** differences in how a removed section and a revolved section are drawn.

2

3.5 STEPPED SECTIONS AND CUT-AWAYS
FEATURES THAT DON'T LINE UP

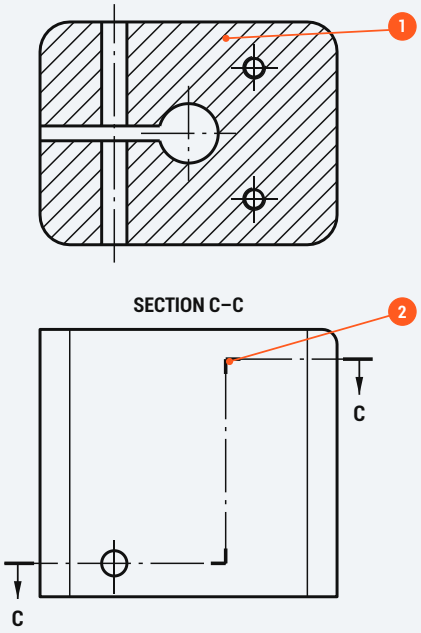

Fig 3.6 Stepped section C–C: sectional plan cut at the pinch-bolt axis and through two tapped holes

The pinch-bolt hole sits 4.5 mm above the base; the tapped holes are near the top. No single flat plane passes through both, so the cutting plane **steps**.

STEPPED SECTION

WHAT A cutting plane made of parallel parts joined by steps at right angles, drawn as if it were one plane.

WHEN Important features lie on different parallel planes and one view should show them all.

HOW Thick at the ends **and at every change of direction** (2). **No line is drawn where the plane steps** (1). Place steps where they cut no feature: 5 mm from the motor axis, between the Ø8 hole and the tapped holes.

WHY C–C shows that the pinch-bolt hole crosses both walls of the clamp slot and that the slot runs into the Ø8 hole. The tapped holes appear in section too.

COMMON ERROR

Drawing a line in the section where the plane changes direction. The section is a single picture: there is no edge at a step.

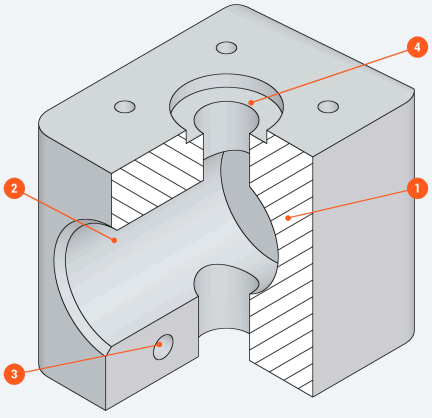

Fig 3.7 Cut-away pictorial of the mount, rendered from the SUMMIT-X model with the near inner corner removed

CUT-AWAY PICTORIAL

WHAT A pictorial view with part of the outside removed to reveal what is inside. Cut faces are hatched, usually at 45° on each face.

WHEN The reader is not trained to read orthographic views, or must see how parts relate in 3D: assembly guides, manuals, training, promotional and technical illustrations.

WHY The rescue team's technician can see at once that the arm slides into a blind bore (2), that the slot and pinch bolt (3) clamp it, and that the motor shaft clears through the counterbored hole (4). The cut faces (1) are hatched.

In CAD a section plane or a Boolean subtract removes the corner, and the cut-away updates if the model changes.

QUICK CHECK 3.5

1 Explain why the step in C–C is placed between the Ø8 hole and the tapped holes.

2

3.6 MISSION TASK
SECTIONS FOR THE WORKSHOP

MISSION TASK 3 **SUMMIT-X MOTOR MOUNT SECTIONS · 19 MARKS**

1 A trainee has drawn SECTION A–A of the motor mount (Fig 3.8). It contains **four** errors. For each error, describe the error **and** state the correction.

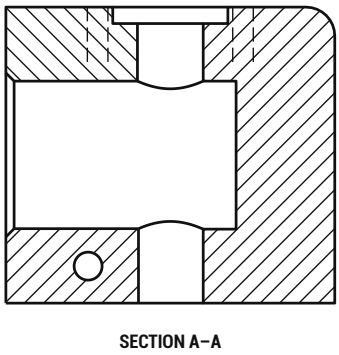

Fig 3.8 Trainee's SECTION A–A

8

2 A section is needed on the vertical plane through the axes of the **two outer tapped holes** (8.84 mm outboard of the motor axis), looking towards the outer end. Sketch SECTION D–D. Show the outline (30 wide × 36 high), the hatching and both tapped holes using the thread conventions. The Ø18 bore stops 8 mm outboard, so it is not cut. No dimensions needed.

SKETCH AREA: SECTION D–D

6

3 The arm is drawn with a revolved section rather than a removed section. Explain this choice, referring to the arm **and** to the reader of the drawing.

3

4 Explain why the pinch bolt is hatched in Fig 3.2(a) but not in Fig 3.2(b).

2

04

CHAPTER 04

TOLERANCES, SURFACE TEXTURE & DATUMS

No machine cuts a part to exactly 18 mm. Learn how a drawing says how close is close enough, how smooth a surface must be and where every measurement starts — so a spare arm fits a SUMMIT-X mount on a hillside first time.

LEARNING INTENTIONS

- Display variances using common, asymmetrical and symmetrical tolerances and mark functional and non-functional sizes
- Understand hole-basis fits and why tolerances and surface finish affect cost
- Communicate surface finish and datums for CAD/CAM

SUCCESS CRITERIA

- I can work out limits, tolerances and clearances from a drawing
- I can read and draw surface texture symbols, including positions a–e
- I can identify datum features and datum targets and explain why they are used

4.1 TOLERANCES
HOW CLOSE IS CLOSE ENOUGH?

Every manufactured size varies a little: tools wear, metal expands as it warms, machines deflect. A **tolerance** is the variation the designer will accept. It is a **display variance**: the same size can be shown in several ways depending on what the reader needs.

NOMINAL SIZE
The size used to identify the feature, e.g. 30 (also called the basic size).

LIMITS
The largest and smallest sizes allowed: the upper limit and the lower limit.

TOLERANCE
Upper limit − lower limit. Always a positive amount.

DEVIATION
How far a limit is from the nominal size, e.g. +0,35 or −0,55.

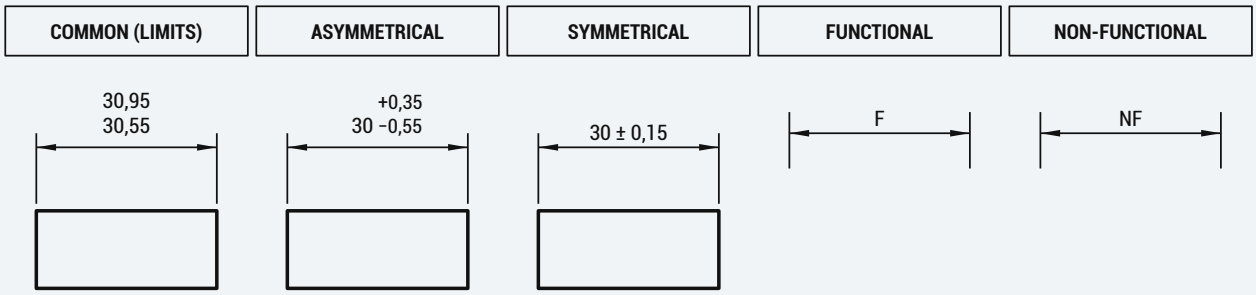

Fig 4.1 The five tolerance conventions in the course specification appendix (values as in the appendix)

METHOD	SHOWN AS	LIMITS	TOLERANCE
Common	30,95 over 30,55	30,95 / 30,55	0,40
Asymmetrical	30 +0,35 / −0,55	30,35 / 29,45	0,90
Symmetrical	30 ± 0,15	30,15 / 29,85	0,30

- **Common (limits)**: the upper limit is written above the lower limit. Nothing to calculate, so it suits the workshop and inspection.
- **Asymmetrical**: nominal size plus an upper and a lower deviation of different sizes.
- **Symmetrical**: equal variation either side, written ±.

WHY GIVE A TOLERANCE?

- **Function**: the motor must sit square and the arm must not wobble.
- **Fit and assembly**: parts made by different firms go together first time.
- **Interchangeability**: a spare arm fits any mount, even on the hill.
- **Inspection**: the inspector has clear limits to accept or reject a part.
- **Cost**: a tolerance tighter than the function needs wastes time and money.

Functional (F) sizes are essential to the function of the part or space: the Ø18 arm bore, the PCD 25 of the motor screws. **Non-functional (NF)** sizes are not: the 40 × 30 × 36 outside of the mount.

NF sizes take the **general tolerance** in the title block (± 0,1 on the SUMMIT-X drawings), so the 40 length may be 39,9–40,1. F sizes get their own, usually tighter, tolerance.

DECIMAL COMMA

The appendix writes decimals with a comma (30,95), the ISO convention; many UK firms use a point. Both mean the same. Follow the appendix in the question paper.

QUICK CHECK 4.1

1 A hole is dimensioned 28 +0,5 / 0. State its limits and its tolerance. **2**

4.2 FITS AND COST
ARM INTO BORE

When one part goes inside another, the tolerances of both decide how they **fit**. In the field a damaged SUMMIT-X arm is swapped for a spare, so any arm must fit any mount: this is **interchangeability**.

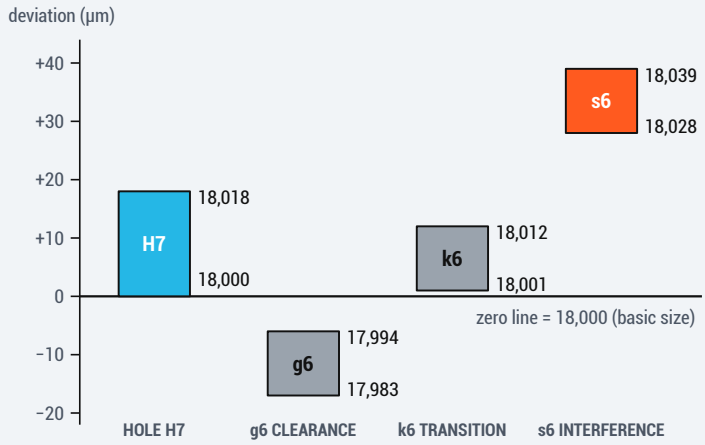

Fig 4.2 Hole-basis fits at Ø18 (ISO 286). Deviations in µm from the 18,000 zero line

HOLE-BASIS SYSTEM

The **hole** is made to a standard tolerance with letter **H** (its lower limit is the nominal size). The **shaft** is then made smaller or larger to give the fit needed. Holes are made with fixed-size tools such as reamers and checked with plug gauges, so keeping the hole standard keeps tooling costs down.

Ø18 H7: H puts the zone on the zero line; 7 is the tolerance grade (IT7 = 0,018 mm at this size). Limits: **18,000 to 18,018**.

- **Clearance fit**: the shaft is always smaller: it slides in.
- **Transition fit**: may give a small clearance or a small interference.
- **Interference fit**: the shaft is always larger: it must be pressed in.

WORKED EXAMPLE: IS THE ARM A CLEARANCE FIT?

Arm end Ø18 g6: 17,994 / 17,983 Bore Ø18 H7: 18,018 / 18,000
Max clearance = largest hole − smallest shaft
= 18,018 − 17,983 = **0,035 mm**
Min clearance = smallest hole − largest shaft
= 18,000 − 17,994 = **0,006 mm**
Both positive, so it is always a clearance fit.

If the arm were Ø18 s6: 18,039 / 18,028
Max interference = largest shaft − smallest hole
= 18,039 − 18,000 = **0,039 mm**
Min interference = smallest shaft − largest hole
= 18,028 − 18,018 = **0,010 mm**
Always an interference fit: the arm could not be changed in the field.

SUMMIT-X uses **H7/g6**: the arm slides in by hand, then the M3 pinch bolt closes the 2 mm slot to grip it. A sloppier fit would let the motor wobble; an interference fit would stop field repairs.

WHY TIGHTER COSTS MORE

A smaller tolerance means slower feeds, extra finishing operations (boring or reaming the bore), better machines and tools, more inspection with gauges, and more parts rejected as scrap. Good design gives a tight tolerance **only** to functional sizes.

EXAM INTEL SHOW WORKING

Write the rule, the numbers and the answer with units. Maximum clearance always uses the **largest hole** and the **smallest shaft**. Keep three decimal places: 0,035, not 0,04.

QUICK CHECK 4.2

1 Use Fig 4.2 to calculate the maximum interference of a Ø18 H7/k6 fit.

2

4.3 SURFACE TEXTURE
HOW SMOOTH MUST IT BE?

Under a microscope every machined surface is a landscape of tiny peaks and valleys left by the cutter. **Ra** is the arithmetic mean height of that profile from its mean line, over an evaluation length, in micrometres (1 µm = 0,001 mm). The Ra on a drawing is a **maximum**: the surface may be smoother, not rougher.

Symbols: BS EN ISO 1302 (now revised as BS EN ISO 21920-1), called up by BS 8888.

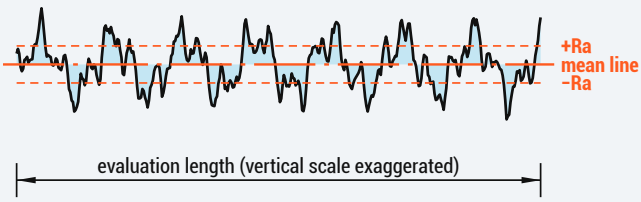

Fig 4.3 Ra is the mean height of the shaded areas (illustrative profile)

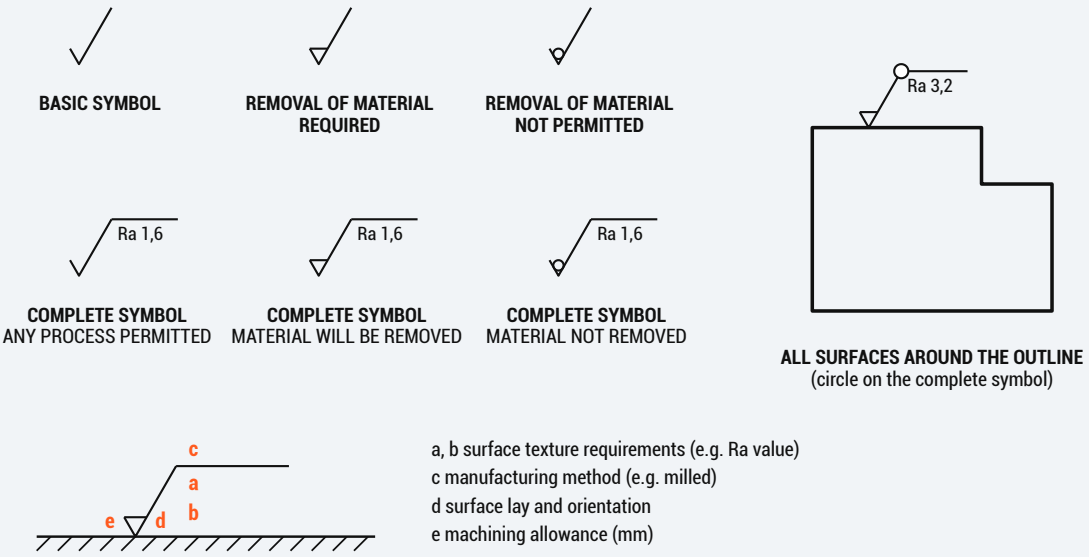

Fig 4.4 Surface texture symbols from the course specification appendix. The point of the symbol touches the surface (or an extension line or leader) from outside the material.

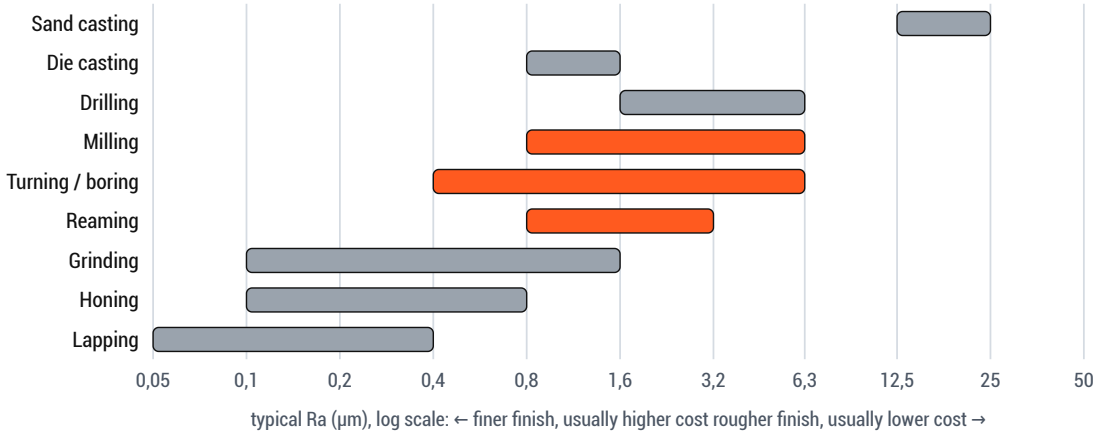

Fig 4.5 Typical Ra ranges for common processes (µm). Ranges overlap: feeds, speeds and tooling change the result.

On the motor mount the general note gives **Ra 3,2**, easily reached by milling. The **H7 bore** is **Ra 0,8**: a rough bore would wear and lose its size, and the arm would not seat evenly when clamped. Boring or reaming gives that finish.

Cost: each step finer (3,2 → 1,6 → 0,8) usually needs slower feeds, a finishing pass or another process. Specify a fine finish only where the function needs it.

4.4 DATUMS
WHERE MEASUREMENT STARTS

A **datum** is the reference that features are located and measured from; a **datum feature** is the real surface or hole that sets it up. Machinist, CAM programmer and inspector all start from the same place.

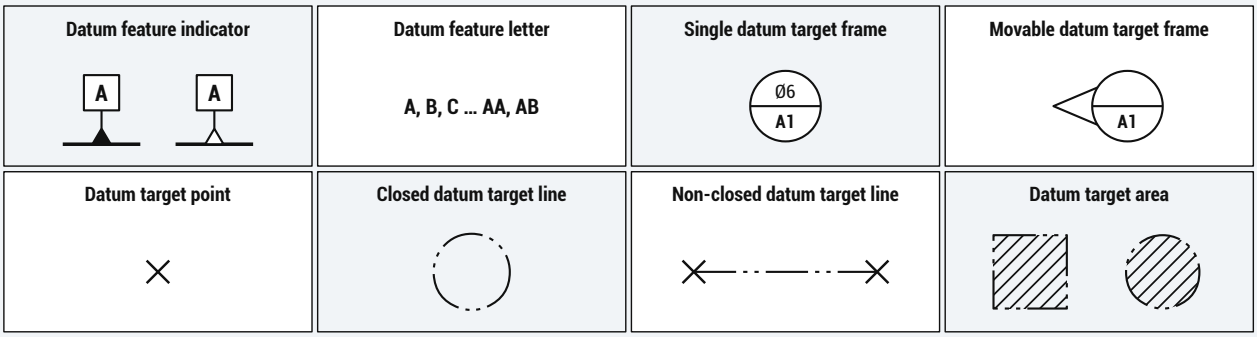

Fig 4.6 Datum feature and datum target symbols from the course specification appendix (BS EN ISO 5459)

- The **datum feature indicator** is a triangle (filled or open) joined to a square frame holding a capital letter.
- **Triangle on the outline** or on an extension line, clear of any dimension line: the datum is the **surface**.
- **Triangle in line with a dimension line**: the datum is the **axis** or centre plane of that feature.
- **Datum targets** are used when the whole surface cannot be a reliable datum: a rough casting, a large or uneven face. Three points (A1, A2, A3) define a plane; the fixture touches only those points. A **movable** target frame shows a locator that slides to meet the part.

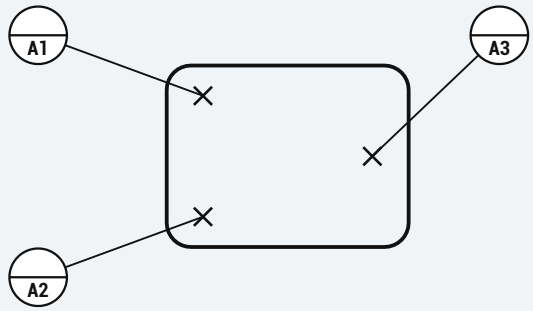

Fig 4.7 Datum A from three target points on a cast face

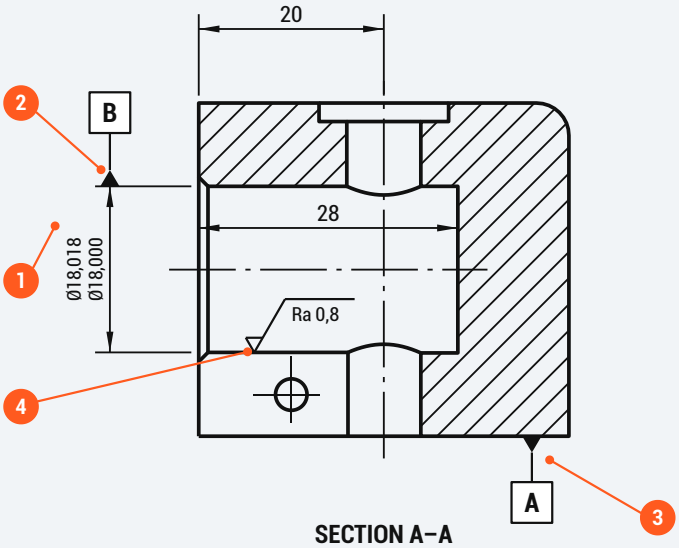

Fig 4.8 Worked example: SECTION A–A from the A3 production drawing

WORKED EXAMPLE

1. Ø18 H7 written as limits (common method): 18,018 over 18,000.
2. Datum **B** in line with the Ø18 dimension: the **bore axis**. The arm, and so the whole motor, is aligned to it.
3. Datum **A** on the base outline: the **base surface**. The part sits on it in the CNC vice, and heights (bore axis 18, pinch hole 4,5) are measured from it.
4. Removal of material required, Ra 0,8 maximum, on the bore.

CAD/CAM: the CAM programmer places the work coordinate system on datum A and the motor axis, and uses the Ra symbols to choose finishing passes (Chapter 07). The inspector sets up on the same datums.

MISSION TASK

4.5 SIGNING OFF THE MOUNT DRAWING

MISSION TASK 4 USE FIG 4.8 AND THE SUMMIT-X A3 PRODUCTION DRAWING · 17 MARKS

1 The arm bore is dimensioned Ø18,018 over Ø18,000.

(a) State the name of this tolerance method **and** calculate the tolerance.

2

(b) A batch of arms is made with ends of Ø17,990 ± 0,005. Calculate the maximum and minimum clearance between arm and bore. Show your working.

4

(c) Explain why the designer chose a clearance fit rather than an interference fit for the arm.

2

2 Describe what the surface texture symbol on the bore tells the machinist, **and** explain why the rest of the mount is given Ra 3,2 instead.

4

3 State whether datum B is a surface or an axis, and explain how the drawing shows this.

2

4 A lower-cost version of the mount may be die-cast. Explain why datum targets, rather than the whole base face, could be used to set up datum A, and name the symbol that marks each target point.

3

05

CHAPTER 05

3D CAD MODELLING TECHNIQUES

At Higher you learned to extrude, revolve and assemble. Advanced Higher asks you to choose the right technique for a form and explain why — from morphing and surface stitching to top-down assemblies and drawings you can trust. Every example is a real feature of the SUMMIT-X model.

LEARNING INTENTIONS

- Apply sweep, loft with rails, variable fillets and chamfers, morphing, surface modelling and Booleans
- Use top-down modelling to create and edit parts inside sub-assemblies
- Use 2D CAD commands, including import and export, and check CAD drawings for errors

SUCCESS CRITERIA

- I can describe, in order, how a part was modelled — sketches, planes, features, sizes
- I can justify the technique I would choose for a given form
- I can identify errors that software or templates put into CAD drawings

5.1 CUSTOMS, PRACTICES & 2D CAD
SAME IDEAS, DIFFERENT BUTTONS

Higher covered extrude, revolve, loft, helix, sweep, shell, fillets, chamfers, arrays and add/subtract/intersect. Advanced Higher adds morphing, rails, surfaces, slice, top-down editing, 2D import/export and checking CAD drawings. Packages differ, but marks go for the **generic term** — not a button name.

- **Sketch → constrain → feature.** A 2D profile on a plane is fully constrained (dimensions + geometric constraints), then turned into a 3D feature.
- **History tree / timeline.** Features are stored in order; edit an early one and the later ones regenerate, so feature order matters.
- **Parameters.** Named values (wheelbase = 450 mm) drive dimensions.
- **Model at full size (1:1)**; choose a scale only when the drawing sheet is laid out.
- **Organise** with layers (2D) or components and bodies (3D).

GENERIC TERM	FUSION	SOLIDWORKS	INVENTOR
Sweep	Sweep	Swept Boss/Base	Sweep
Loft with rails	Loft — rails	Loft — guide curves	Loft — rails
Add / subtract / intersect	Combine	Combine	Combine
Slice	Split Body	Split	Split
Patch · stitch	Patch · Stitch	Filled Surface · Knit Surface	Boundary Patch · Stitch
Morph / freeform	Form (T-splines)	no direct equivalent	Freeform

STANDARD 2D CAD COMMANDS

Draw	line, polyline, arc, circle, rectangle, polygon, ellipse, spline, construction line
Modify	trim, extend, offset, mirror, fillet, chamfer, move, copy, rotate, scale, stretch, explode, join
Array	rectangular (box), polar (radial) and path arrays
Precision	object snaps (end, mid, centre, tangent, intersection), grid, ortho, absolute and relative coordinates
Organise, annotate	layers, blocks, external references; dimension, text, leader, hatch; paper-space layouts

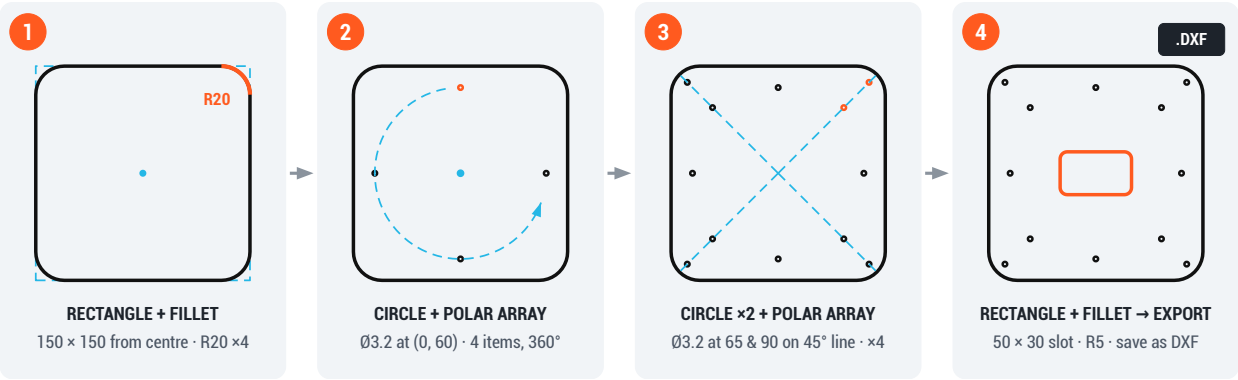

Fig 5.1 The SUMMIT-X lower frame plate built with 2D commands, then exported as a DXF for the laser cutter (true sizes).

EXPORT — DXF FOR CUTTING

Check: **mm at 1:1**; every cut profile **closed**; no **duplicate lines** (cut twice); dimensions and construction lines **removed**; cut and engrave on **separate layers or colours**.

IMPORT

Bring a DXF or DWG into a sketch as a starting profile (check units and scale), or place a scanned sketch as an **underlay** to trace. 3D data arrives as STEP or IGES (Chapter 08).

5.2 EXTRUSION ALONG A PATH · LOFTING
SWEEPS AND LOFTS

SWEEP (EXTRUSION ALONG A PATH)

A closed **profile** travels along a **path** (open or closed, 2D or 3D) and keeps its shape. The profile is normally drawn on a plane **perpendicular to the path** at its start. Every bend radius must be larger than the profile radius, or the body folds into itself.

Landing skid: path sketched on a plane 70 mm from the centre — a splayed U, 110 mm deep, **R25** bends. Plane normal to the path at its start → **Ø10** circle → sweep. Repeated at -70 mm.

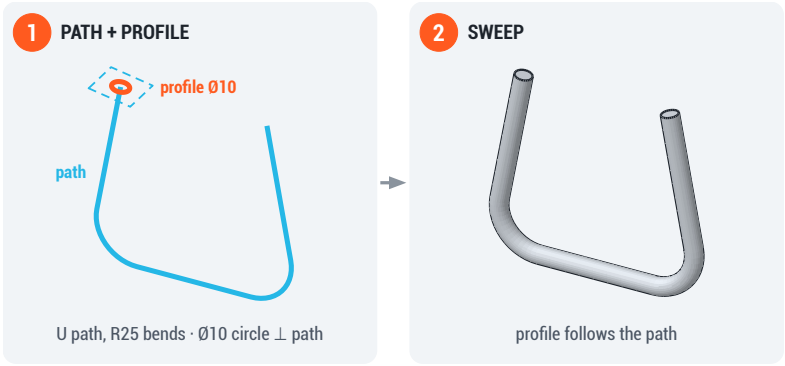

Fig 5.2 Landing skid: profile + path → sweep.

LOFT

A loft blends between two or more **profiles on different planes**, which may change shape and size. The order you pick them sets the order of the blend; start and end conditions (such as tangency) control how the form leaves each profile.

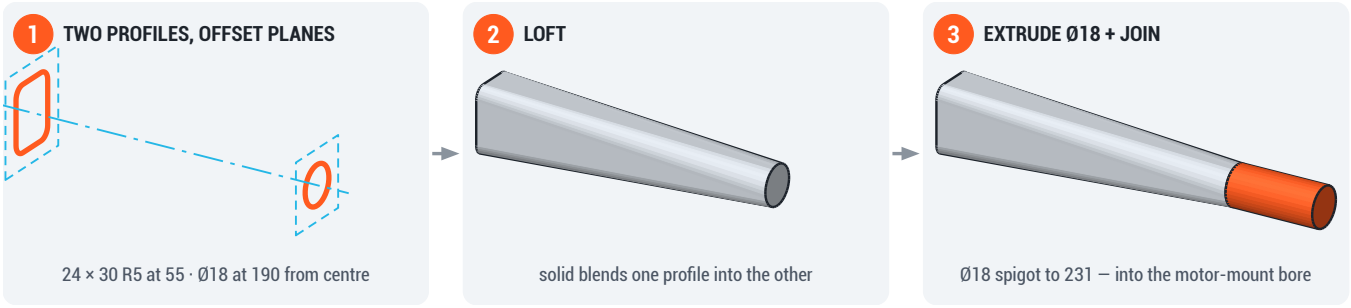

Fig 5.3 Arm: offset plane 55 mm from centre — rounded rectangle 24 × 30, R5; offset plane at 190 mm — Ø18 circle. The loft is deep at the frame, where the bending moment is greatest, and round at the motor. The Ø18 profile is then extruded 41 mm and joined so the solid Ø18 end fits the mount bore.

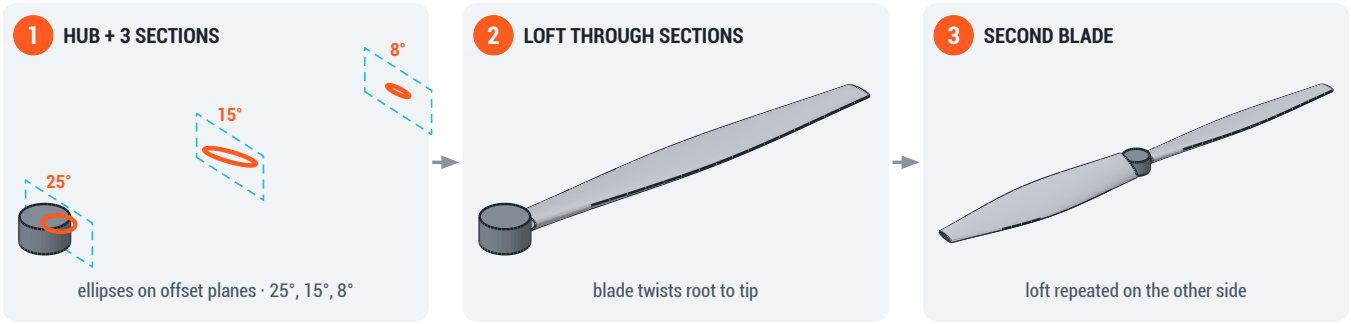

Fig 5.4 Propeller blade: ellipses 16 × 4.8, 24 × 3.2 and 10 × 2 on planes 5, 65 and 127 mm from the hub axis, each rotated to its pitch angle, lofted into one twisted blade; the loft is repeated for the second blade and joined to the Ø14 × 8 hub.

COMMON ERROR

Course reports note candidates using a **loft** where an **extrude along a path** was needed. Same profile following a curve → **sweep**. Profile changing between planes → **loft**.

QUICK CHECK 5.2

1 State why each blade section is rotated to a different angle.

1

5.3 LOFTING WITH RAILS · SHELL
THE CANOPY: A LOFT YOU CAN STEER

A plain loft only knows its sections — between them, the software decides the shape. **Rails** (called guide curves in some software) are extra curves the lofted surface must pass through, so **you** control the form between the sections.

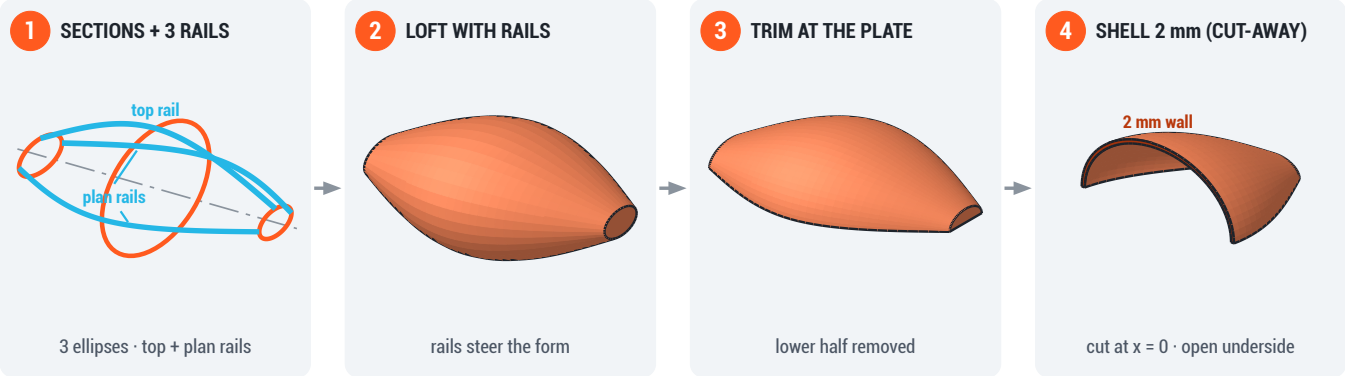

Fig 5.5 SUMMIT-X canopy: three elliptical sections + three rails → loft with rails → trim → shell (true section sizes from the model).

HOW THE CANOPY WAS MODELLED

01 **Sections.** Three ellipses on planes at the rear, middle and nose (-75, 0 and +78 mm along the drone): **40 × 20**, **100 × 70** and **30 × 16**, all centred on the top face of the upper frame plate.

02 **Rails.** Rail 1 — a spline through the top of each section, drawn on the centre plane (the side profile). Rails 2 and 3 — splines through the left and right sides, drawn on the plate plane (the plan profile). Each rail must touch every section.

03 **Loft with rails** → a solid whose side and plan outlines follow the rails exactly.

04 **Trim.** An extrude-cut removes everything below the plate, leaving a flat base.

05 **Shell 2 mm** inwards with the flat base face removed → a hollow, open-bottomed cover. PA12 nylon, SLS printed, 33.5 g.



Fig 5.6 The canopy in Fusion

RAILS OR CENTRE LINE?

A **rail** controls an outside edge of the form. A **centre line** runs through the middle of the sections and controls the path the loft follows, keeping each section square to it.

EXAM INTEL DESCRIBING A LOFT

For full marks name: the **planes** (and their offsets), each **section** (shape and size), the **rails**, the **feature**, then any **edits** with sizes — here trim and a 2 mm shell. Order matters: the flat base face must exist **before** the shell can remove it.

QUICK CHECK 5.3

1 Explain why the canopy needs rails rather than a loft through the three sections alone.

2

5.4 EDGES ON THE MOTOR MOUNT

REGULAR & IRREGULAR (VARIABLE) FILLETS AND CHAMFERS

A **fillet** rounds an edge; a **chamfer** bevels it. **Regular**: same size all along. **Irregular**: a **variable** fillet changes radius along the edge; a chamfer has unequal distances or a non-45° angle.

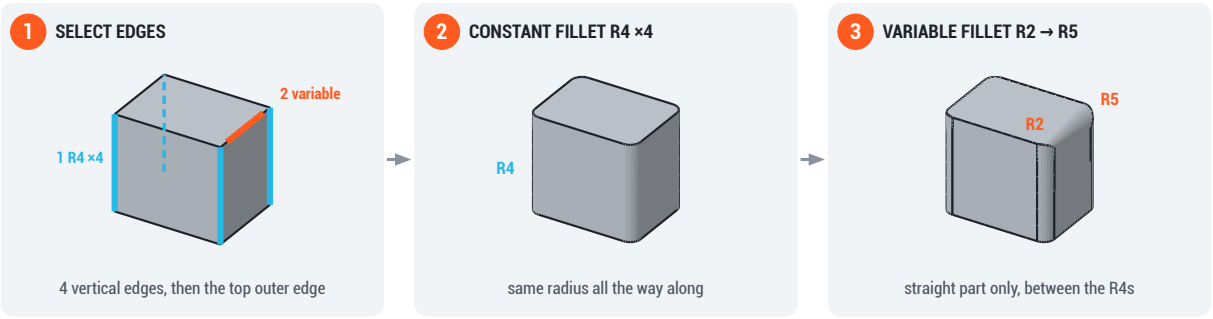

Fig 5.7 Motor mount block 40 × 30 × 36: constant R4 fillets on the four vertical edges first, then a variable fillet on the straight part of the top outer edge between the R4 corners (the order used in the SUMMIT-X model).

EDGE	TREATMENT	WHY
4 vertical edges	Regular fillet R4	No sharp corners to cut hands or chip
Top outer edge	Variable fillet R2 → R5, between the R4 corners	Radius set at each end, blended between
Arm-bore entry	Chamfer 1 × 45° (equal distance) on an arc edge	Lead-in for the arm tube; removes the burr



Fig 5.8 Finished mount in Fusion

GOOD PRACTICE

- Add fillets and chamfers **late** in the history; order matters: the R4s first leave a straight top edge for the variable fillet.
- **Select edges with care:** the clamp slot breaks the bore's entry circle, so the chamfer goes on an **arc**.
- Inside vertical corners of a CNC-milled pocket cannot be sharper than the **cutter radius**.

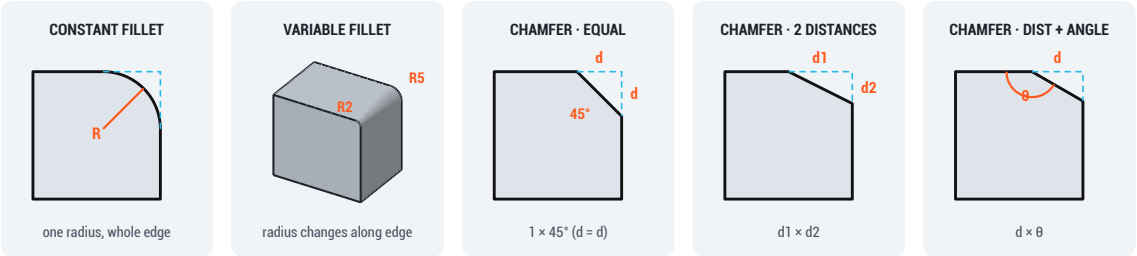

Fig 5.9 Fillet and chamfer definitions. A variable fillet needs a radius at each end of the edge (and optionally at points between).

QUICK CHECK 5.4

1 State the information the software needs to create the variable fillet on the mount.

2

5.5 MORPHING (FREEFORM MODELLING) DIGITAL CLAY: THE PILOT'S GRIP

Morphing — also called freeform, T-spline or subdivision modelling — shapes a form like clay. You push and pull a **polygon mesh** (a cage of vertices, edges and faces) and the software fits a smooth surface through it. SUMMIT-X pilots need a controller grip that fits a gloved hand: a job for morphing.

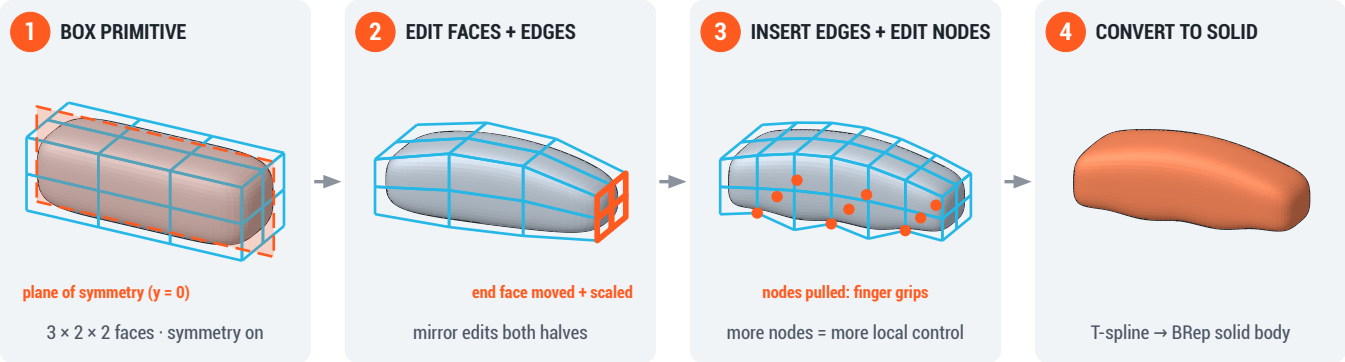

Fig 5.10 Morphing a controller grip. Blue: the polygon mesh (cage). Grey: the smooth form it controls (illustrative).

THE PROCESS

01 **Apply a polygon mesh.** Start from a primitive (box, cylinder, sphere, plane, torus) or a form made from a sketch, and set the **mesh size** — the number of faces in each direction (here 3 × 2 × 2).

02 **Set symmetry.** A plane (axis) of symmetry mirrors every edit to the other half; circular symmetry repeats edits around an axis.

03 **Edit nodes, edges or faces.** Select and **move, rotate or scale** them. Moving a face drags a whole region; moving one node makes a local bump or hollow.

04 **Refine.** Insert edges or subdivide faces where you need more control; crease edges you want sharp.

05 **Convert to solid.** Finish the form so the closed T-spline becomes a solid (BRep) body. Now shell, holes, fillets and Booleans can be used.

QUICK CHECK 5.5

1 Explain why symmetry was switched on before editing the grip.

_____

_____

_____ 1

POLYGON MESHES FROM OUTSIDE CAD

Scans and sculpting apps produce triangle meshes (STL, OBJ). In mesh tools they can be repaired, remeshed and reduced, then **converted to a solid** — either faceted (one flat face per triangle) or with planes and cylinders recognised, depending on the software.

ADVANTAGES	LIMITATIONS
Fast for organic, ergonomic forms	Hard to set exact sizes
Smooth, continuous curvature	Poor for precise mechanical features
Symmetry halves the work	Dense meshes are slow and hard to edit

EXAM INTEL EXPAND YOUR ANSWER

Course reports say most candidates gain one mark for "good for organic forms" but few go further. Name the **primitive** and **mesh size**, the **symmetry**, which **nodes, edges or faces** were edited and how, and the **conversion to a solid**.

5.6 SURFACE MODELLING
SKINS FIRST, SOLID LAST

A **surface** has area but no thickness. Surface modelling builds a skin from curves, trims and joins the pieces, then makes a solid — used for car bodies, phone cases, thin-walled mouldings and repairing imported geometry.

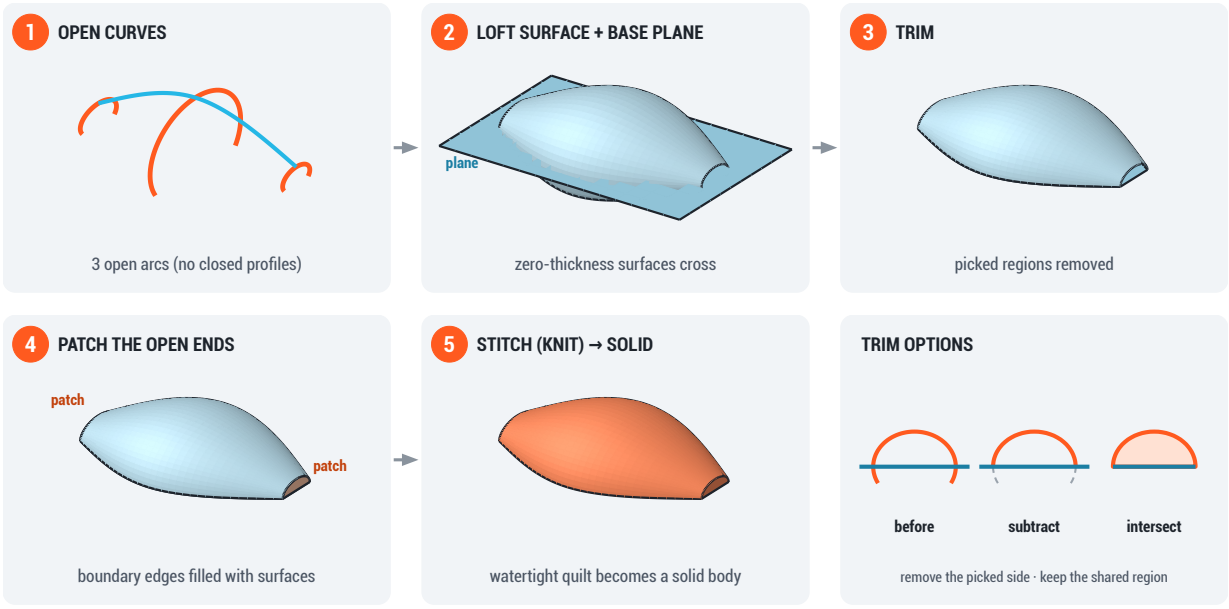

Fig 5.11 A surface-modelling route to the SUMMIT-X canopy, using the same section sizes as Fig 5.5.

TOOL	WHAT IT DOES	IN FIG 5.11
Boundary / patch	Patch fills a closed loop of edges with a surface; a boundary surface spans curves in one or two directions	Step 4 — rear and nose ends patched
Trim	One surface (or a plane or sketch) cuts another. You **subtract** the region you pick, or keep only the region the surfaces share (**intersect**)	Step 3 — loft and plane trim each other
Stitch / knit	Joins surfaces that share edges into one quilt; if the quilt is closed (watertight) it becomes a solid	Step 5 — four surfaces → one solid
Thicken	Gives a surface a thickness to make a thin solid	Or thicken the skin by 2 mm

ADVANTAGES	DISADVANTAGES
Each face controlled separately	More steps than solid modelling
Builds forms from curves or scan data	Gaps between surfaces stop a solid forming
Repairs gaps in imported IGES/STEP	Mass and volume need a solid first
Thin walls direct, by thicken	Open surfaces must be closed or thickened to print

COMMON ERROR

When a question asks for **surface** techniques, do not model a solid and shell it — course reports note this loses marks. Describe the curves, the surfaces, trims, patches and the stitch.

QUICK CHECK 5.6

1 State why the surfaces must be stitched before the canopy's mass can be found.

1

5.7 POLYGONS & BOOLEAN FUNCTIONS
BUILD BY ADDING AND TAKING AWAY

In 3D graphics and illustration, objects are made of **polygons**: flat faces (usually triangles or four-sided quads) defined by vertices and edges. Simple polygon primitives — boxes, cylinders, spheres — are combined with **Boolean functions** to make complex forms.

POLYGON COUNT

A curved surface can only be **approximated** by flat polygons. More polygons give a smoother silhouette but larger files and slower rendering or animation. Smooth shading can make a low-polygon model look curved in a render, but its outline still shows the facets. STL files for 3D printing are triangle meshes, so export resolution matters. Booleans on meshes can leave long, thin triangles or holes along the cut: keep meshes closed (watertight) and check the result.

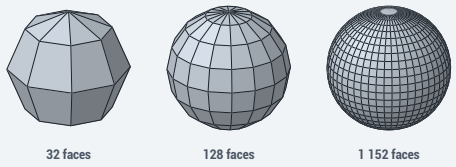

Fig 5.12 The same sphere at three polygon counts

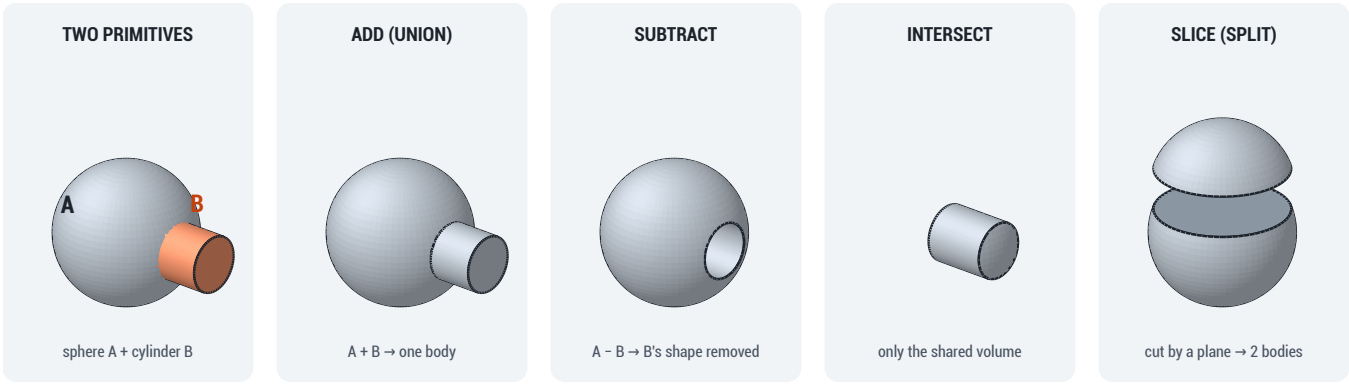

Fig 5.13 The four Boolean functions on a sphere (A) and a cylinder (B).

FUNCTION	RESULT	REMEMBER
Add (union, join)	Two overlapping bodies become one; internal faces are removed	The bodies must touch or overlap
Subtract (difference, cut)	The tool body's shape is removed from the target	Order matters: A − B is not B − A
Intersect (common)	Only the volume shared by both bodies is kept	Useful for shapes defined by two views
Slice (split)	A plane or surface divides a body into separate bodies; no material is removed	Delete one piece to "slice off" part of a form

SUMMIT-X THERMAL CAMERA POD

A semicircle (R28) revolved about its diameter makes a **Ø56 sphere**. The top is sliced flat 4 mm below the top (leaving a Ø28.8 flat face — in the model this was an extrude-cut, a subtract). A **Ø16 × 14** stem and a **Ø22 × 8** lens boss are **added**; a **Ø16 × 3** lens recess is **subtracted**. PC/ABS, 104.2 g. See Mission task 5.10.

QUICK CHECK 5.7

1 The flat top of the camera pod could be made by a Boolean **subtract** or by a **slice**. Explain the difference between the two methods.

2

5.8 TOP-DOWN MODELLING IN ASSEMBLIES
DESIGN THE DRONE, THEN THE PARTS

Bottom-up: parts are modelled separately, then inserted and positioned with constraints (joints or mates). **Top-down**: start at the assembly and create or edit parts **in context**, referencing the parts around them, so changes flow through the design.

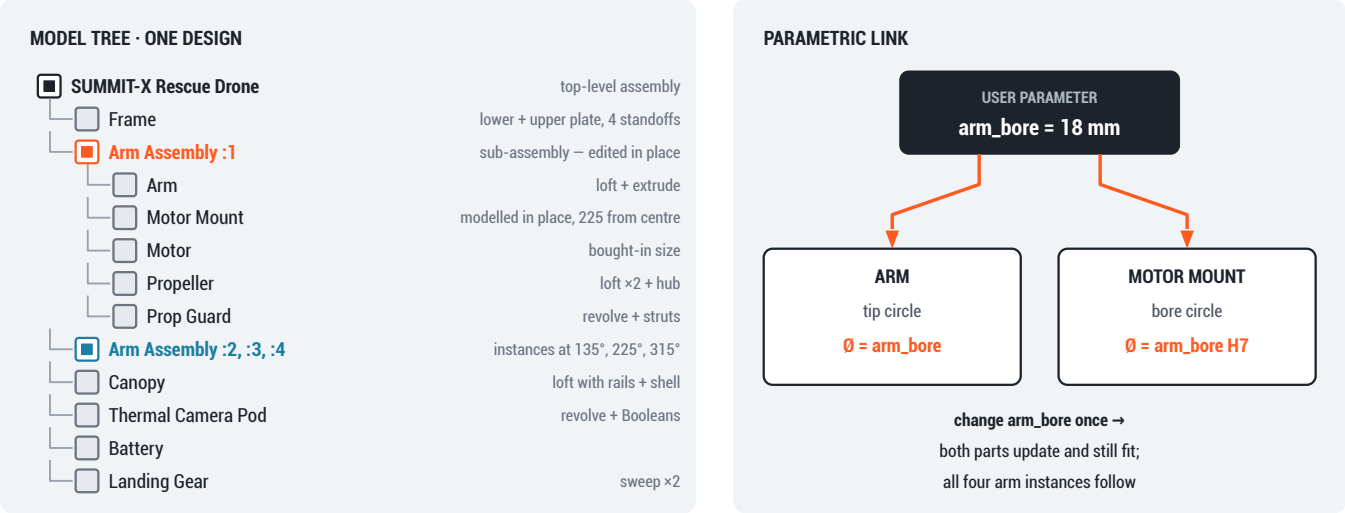

Fig 5.14 SUMMIT-X was built top-down as one Fusion design. One Arm Assembly sub-assembly is placed four times.

HOW SUMMIT-X USES IT

- Every component was created **inside one design**, in the drone's coordinates — the motor mount was modelled in place, its motor axis 225 mm from the centre, over the arm end.
- The **Arm Assembly** sub-assembly (five parts) was modelled once, then placed as **three more instances** at 135°, 225° and 315°. Edit the mount in one and all four change.
- The design stores **user parameters** (wheelbase = 450 mm, arm_bore = 18 mm). Drive the arm tip and the mount bore from arm_bore — or **project** the arm's tip circle into the bore sketch — and the parts stay a matching pair.

EDITING A PART INSIDE A SUB-ASSEMBLY

01 Activate the sub-assembly, then the component to edit (in context).

02 Sketch on the component, **projecting** edges from neighbouring parts.

03 Add or edit the feature; return to the top level — every instance updates.



Fig 5.15 Four Arm Assembly instances, 90° apart

EXAM INTEL **MAKE IT SPECIFIC**

Marking instructions give a generic top-down answer 1 mark at most. Apply it to the **component in the question**: which geometry is referenced, which part it controls, what updates.

	TOP-DOWN	BOTTOM-UP
Advantages	Parts fit first time; one change updates related parts and every instance	Independent parts, easy to reuse; bought-in parts (e.g. a supplier's motor STEP file) drop straight in; a team can work in parallel
Disadvantages	Links can break or become circular; reusing a part elsewhere drags its links along; slower to rebuild	Changes must be repeated part by part; fit errors only show when assembled

5.9 ORTHOGRAPHIC & PICTORIAL WORK FROM CAD
DRAWINGS YOU CAN TRUST

CAD drawings — base and projected views, sections, details, exploded and pictorial views, parts lists — come from the model, but are only as good as their **template and settings**.

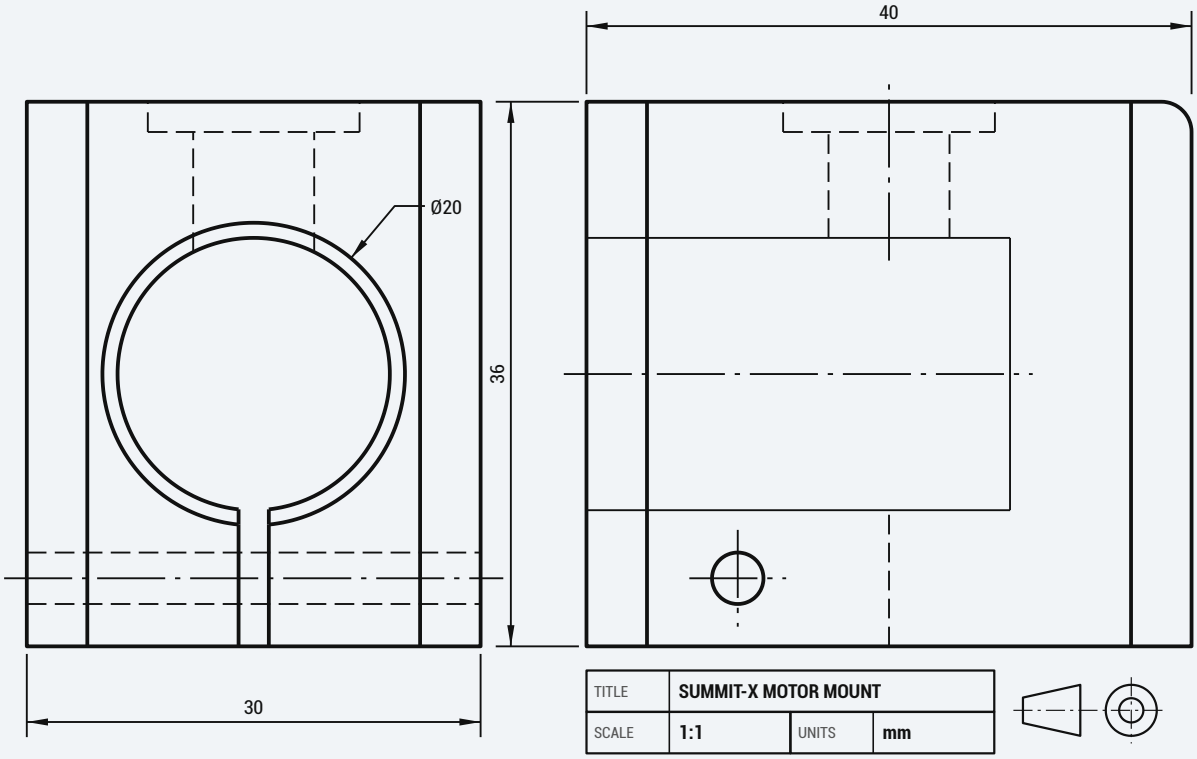

Fig 5.16 CAD-generated drawing of the motor mount, drawn at 2:1 from a badly set-up template. It contains **six** errors; every kind in the table appears except threads and hatching. Hidden detail of the M3 holes is omitted.

ERROR	CAUSE AND CURE
Wrong projection angle	Template set to first angle. Set third angle; check symbol and layout agree.
Tangent edges shown	No real edge where a fillet meets a face. Turn off, or show thin and short of the outline.
Threads, hatching	Threads hidden or drawn as helices — use the convention. Shafts, bolts, pins, ribs cut lengthways must not be hatched.
Centre lines missing	Add centre lines and marks to holes, bores, axes and pitch circles.
Automatic dimensions	Taken to a chamfer or tangent edge, duplicated or crowded. Dimension functional features.
Default scale & line types	Template 1:1 left in the title block; hidden lines continuous; lines too heavy.

PICTORIAL VIEWS FROM CAD

CAD isometric views are true **isometric projections** (axes about 0.82 of true length) — never measure or dimension them. Align exploded views on assembly axes, with no overlaps.

QUICK CHECK 5.9

1 Identify three of the six errors in Fig 5.16.

3

5.10 CHOOSING A TECHNIQUE
WHICH TECHNIQUE WOULD YOU USE?

IF THE FORM…	USE
has a constant section in a straight line (frame plates)	**Extrude**
has a constant section around an axis (prop guard)	**Revolve**
keeps its section along a curved path (skids)	**Sweep**
changes shape between planes (arm, blades)	**Loft**
must follow set outlines between sections (canopy)	**Loft + rails**

IF THE FORM…	USE
is organic, ergonomic, few exact sizes (grip)	**Morphing**
is a complex thin skin from curves or imported data	**Surfaces**
is simple shapes combined, cut or split (pod)	**Booleans**
has rounded or bevelled edges, same or changing size (mount)	**Fillet / chamfer**
is thin-walled with one open face (canopy)	**Shell**

MISSION TASK 5.10 **THERMAL CAMERA POD — STAGES · 6 MARKS**

The stages used to model the SUMMIT-X thermal camera pod are shown below. The sphere is Ø56; the stem is Ø16 × 14; the lens boss is Ø22 × 8 and the lens recess Ø16 × 3.

STAGE 1

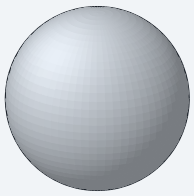

STAGE 2

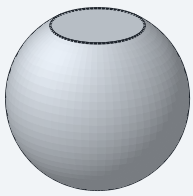

STAGE 3

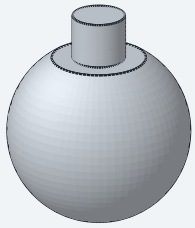

STAGE 4

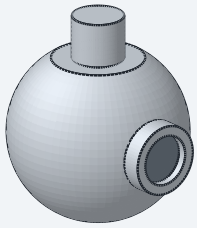

1 (a) Describe how the sphere at Stage 1 was modelled, referring to the sketch and the feature used.

2

(b) State a possible Boolean function from Stage 1 to Stage 2 _____ and from Stage 2 to Stage 3 _____

2

(c) Describe the two edits made between Stage 3 and Stage 4, including sizes.

2

MISSION TASK 5.11 **SUMMIT-X MODELLING REVIEW · 11 MARKS**

1 The prop guard (right) is a ring Ø270 inside, with a 3 mm wall, 30 mm high, R1.2 fillets on its circular edges and two 8 × 6 struts to the motor mount.

Describe how the guard could be modelled. Refer to sketches, planes, features and sizes.

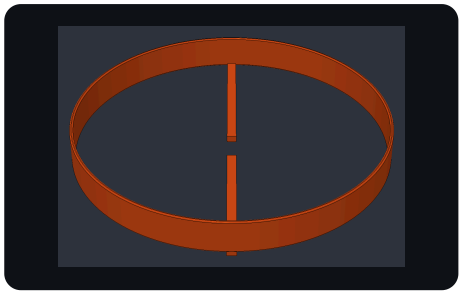

4

2 The Highland unit wants stiffer arms with a Ø20 end. Explain how top-down modelling of the Arm Assembly makes this change quicker and more reliable than editing separate parts.

3

3 A designer proposes modelling the pilot's controller grip by morphing. Describe how the grip would be modelled, referring to the polygon mesh, symmetry, editing and conversion.

4

06

CHAPTER 06

SIMULATION: FEA, CFD & MECHANICAL ANIMATION

Before a single part of SUMMIT-X is machined or printed, it has already been dropped on a rock, blasted by a Glen Coe crosswind and assembled by a technician — inside the computer. This chapter shows you how those tests are set up, how to read what they produce, and when you still need the real thing.

LEARNING INTENTIONS

- Set up FEA and CFD tests: materials, constraints, loads, fluids, flow and environmental conditions, analysis type and units
- Analyse FEA and CFD output to judge design success and the changes needed
- Use mechanical animation to show movement, operation and assembly

SUCCESS CRITERIA

- I can calculate and interpret a factor of safety from an FEA plot
- I can explain what a CFD plot shows and name external factors that could make a test misleading
- I can compare digital simulation with physical testing, including environmental and social impacts

DIGITAL SIMULATION

6.1 TEST IT BEFORE YOU MAKE IT

A **simulation** applies the laws of physics to a CAD model to predict how a product will behave before anything is made. SUMMIT-X uses three kinds, each answering a different design question.

FEA · FINITE ELEMENTS

Finite element analysis predicts how a product performs under **forces and loads**.

SUMMIT-X: will an arm or motor mount fail in a hard landing?

CFD · FLUID DYNAMICS

Computational fluid dynamics predicts how **fluids** — liquids and gases, including air — move around or through a product.

SUMMIT-X: how does a crosswind push on the body and the prop guards?

MECHANICAL ANIMATION

Shows how a product or mechanism **moves, operates and is assembled**.

SUMMIT-X: in what order is it built, and does anything collide?

DIGITAL SIMULATION COMPARED WITH PHYSICAL TESTING

FACTOR	DIGITAL SIMULATION	PHYSICAL TESTING (PROTOTYPES, RIGS, WIND TUNNELS)
Cost and time	Many options tested in hours; no material, tooling or test rig needed	Every option needs a prototype; destructive tests use one up each time
Information	Results at **every point**, inside and out — e.g. stress inside the motor mount	Results only where sensors (strain gauges, pressure taps) are fitted
Changes	Edit the CAD model and re-run — easy to compare design A with design B	Each change means remaking parts
Accuracy	Only as good as the inputs: wrong material data, loads or constraints give a convincing but wrong answer	Includes real materials, real manufacturing defects and real conditions
Safety	Crashes, drops and storms simulated without risk	Some tests are dangerous or hard to repeat exactly
Confidence	A prediction: must be checked (validated)	Evidence that the product works; often required by standards and regulators

In industry the two work together: simulation narrows many ideas to one, then a physical test **validates** it — for SUMMIT-X, a drop test and a flight test in wind.

ENVIRONMENTAL OUTCOMES OF DIGITAL SIMULATION

- **Fewer physical prototypes** — less material, waste, energy and transport.
- **Optimised designs** — material removed where it is not needed, so lighter products use less energy in use (longer flights per charge).
- **Problems found before production** — less scrap and fewer product recalls.
- **But** solving large models uses electricity (powerful computers, cloud data centres), and that hardware has its own manufacturing footprint and e-waste.

HOW DIGITAL TECHNOLOGIES CAN IMPACT SOCIETY

- **Safer products, sooner** — vehicles, aircraft and rescue equipment tested in far more situations, and developed faster.
- **Changing jobs** — fewer prototype-making roles, more demand for simulation and CAD skills and retraining.
- **Access** — costly software and computers can favour large firms; cloud and education licences widen access.
- **Over-reliance** — a colourful plot can hide a bad set-up; the engineer is still responsible.

6.2 FINITE ELEMENT ANALYSIS
SETTING UP AN FEA TEST

FEA splits a model into a **mesh** of thousands of small, simple shapes called **elements**, joined at points called **nodes**. The software works out how every element stretches and bends, then adds them together to predict how the whole product performs under forces and loads.

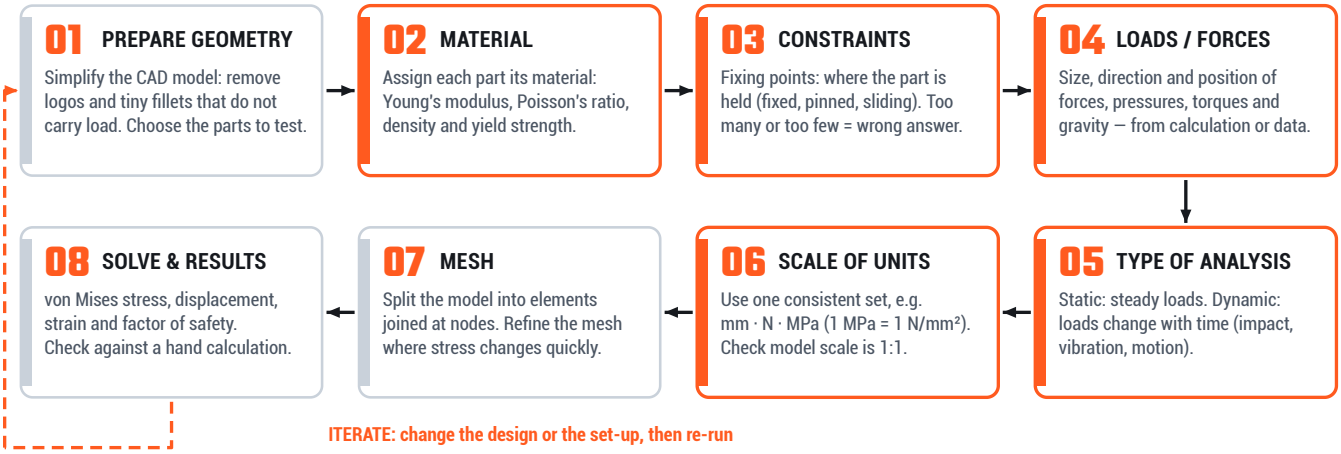

Fig 6.1 The stages of an FEA test. Orange stages are the set-up decisions named in the course specification.

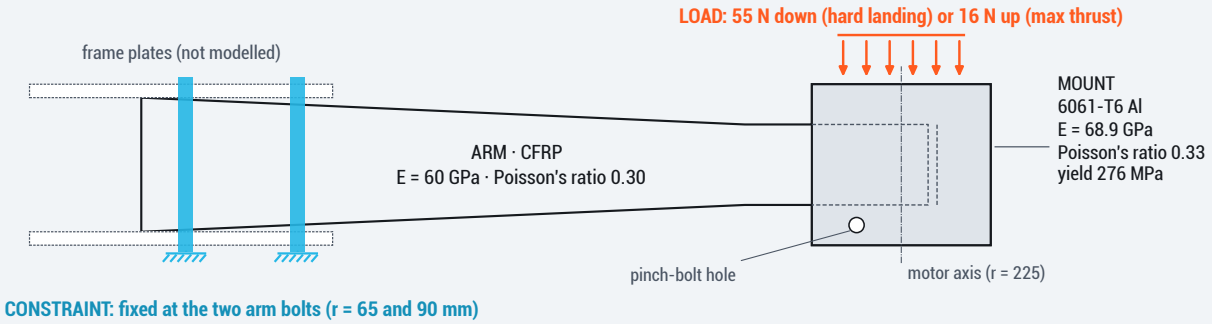

Fig 6.2 SUMMIT-X arm and motor mount set up for FEA (side profile along one arm). Cyan = constraints (fixed at the bolts); orange = loads on the motor seat.

STAGE	SUMMIT-X ARM AND MOUNT
Materials	Arm: CFRP (treated as having the same stiffness in every direction). Mount: 6061-T6 aluminium. Values from the material library or the supplier's data sheet.
Constraints	The arm is bolted between the frame plates by two M3 bolts — the two bolt holes are **fixed** (no movement or rotation).
Loads	Case 1 — maximum motor thrust: **16 N up**. Case 2 — hard landing: **55 N down**.
Type of analysis	**Static**. A landing is really **dynamic** (the load changes over a fraction of a second), so it is modelled as an **equivalent static load**. Vibration from the spinning propeller would need a dynamic analysis.
Scale of units	mm · N · MPa (1 MPa = 1 N/mm²). Model at 1:1, exactly as in the CAD file.

WHERE DO THE LOADS COME FROM?

Thrust: 4 motors × 16 N = 64 N; weight = 2.19 × 9.81 = 21.5 N, a thrust-to-weight ratio of about 3 : 1.

Hard landing: a 0.5 m drop gives $v = \sqrt{(2gh)} = \sqrt{(2 \times 9.81 \times 0.5)} = 3.13$ m/s. If the skids flex and stop the drone in 25 mm: $a = v^2 \div 2s = 3.13^2 \div 0.050 = 196$ m/s² (20 g).

Mass on the arm end: mount 90.9 g + motor ≈ 85 g (assumed typical 2810 motor) + propeller 14.2 g + guard 89.2 g ≈ 0.28 kg.

$F = ma = 0.28 \times 196 \approx 55$ N

6.3 READING THE RESULTS

ANALYSING FEA OUTPUT

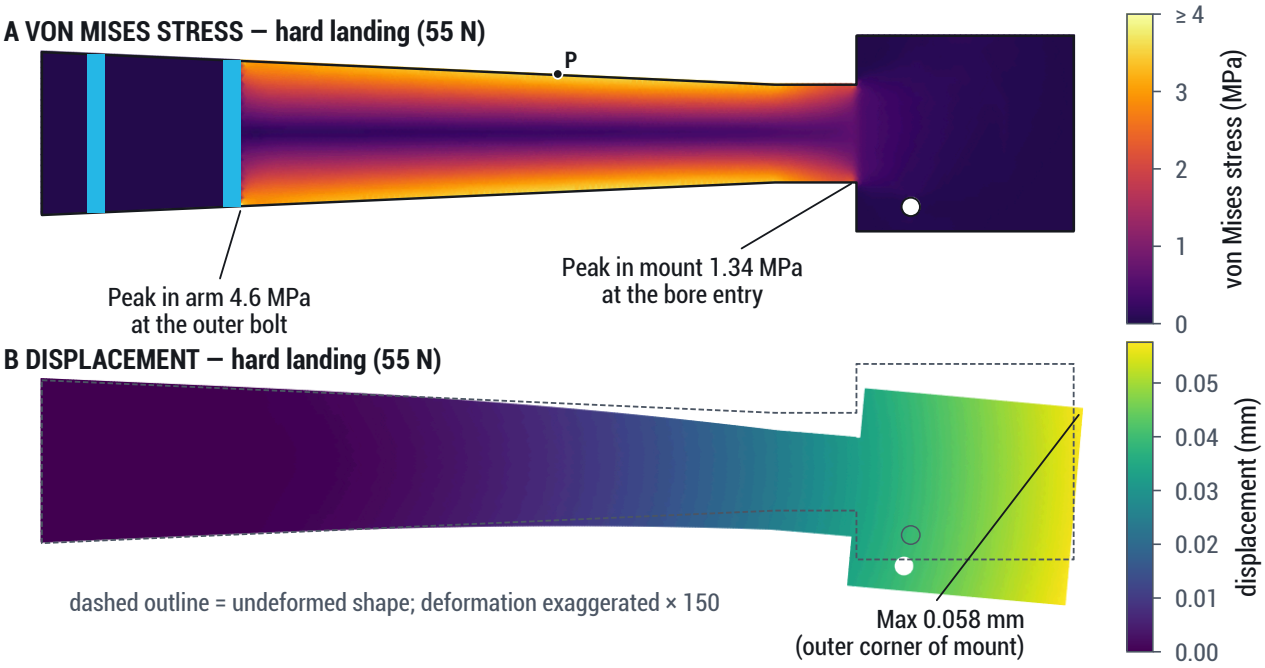

Fig 6.3 Illustrative simulated output: hard-landing case. Computed for this booklet with a 2D finite element model whose thickness follows the real 3D part (a CAD package would mesh the solid in 3D).

RESULTS TYPES

von Mises stress (MPa) — combines all the stresses at a point into one value that can be compared with the material's yield strength. Used for ductile materials such as metals.

Displacement (mm) — how far each point moves. The plot is exaggerated so you can see the shape change; read the real value from the colour bar.

Strain — change in length ÷ original length (no units).

Factor of safety (FoS) = yield strength ÷ maximum stress. Below 1, the part is predicted to yield (bend permanently).

WORKED EXAMPLE — IS THE MOUNT SAFE?

Mount peak stress 1.34 MPa; 6061-T6 yield strength 276 MPa.
FoS = 276 ÷ 1.34 = 206 (hard landing) and 276 ÷ 0.389 = 710 (thrust).

Design success? Yes — far from yielding, and the 0.058 mm movement will not affect the propeller.

Changes? A FoS this high means the parts are much heavier than these loads need. Material can be removed (shell the arm, pocket the mount) and the test re-run — after also checking crash impact, vibration fatigue and the pinch-bolt clamping load.

CFRP does not yield: compare its stress with the **failure strength** from the supplier.

QUICK CHECK 6.1

1 The mount's peak stress is 1.34 MPa under the 55 N landing load and 0.389 MPa under the 16 N thrust load. Compare the ratio of the loads with the ratio of the stresses, and state what this shows about a linear static analysis.

2

6.4 MESH, CHECKS & EXTERNAL FACTORS
CAN YOU TRUST THE RESULT?

Software always produces a colourful answer — even from a poor set-up. Before trusting it, check the mesh, sense-check the numbers and think about what the test left out.

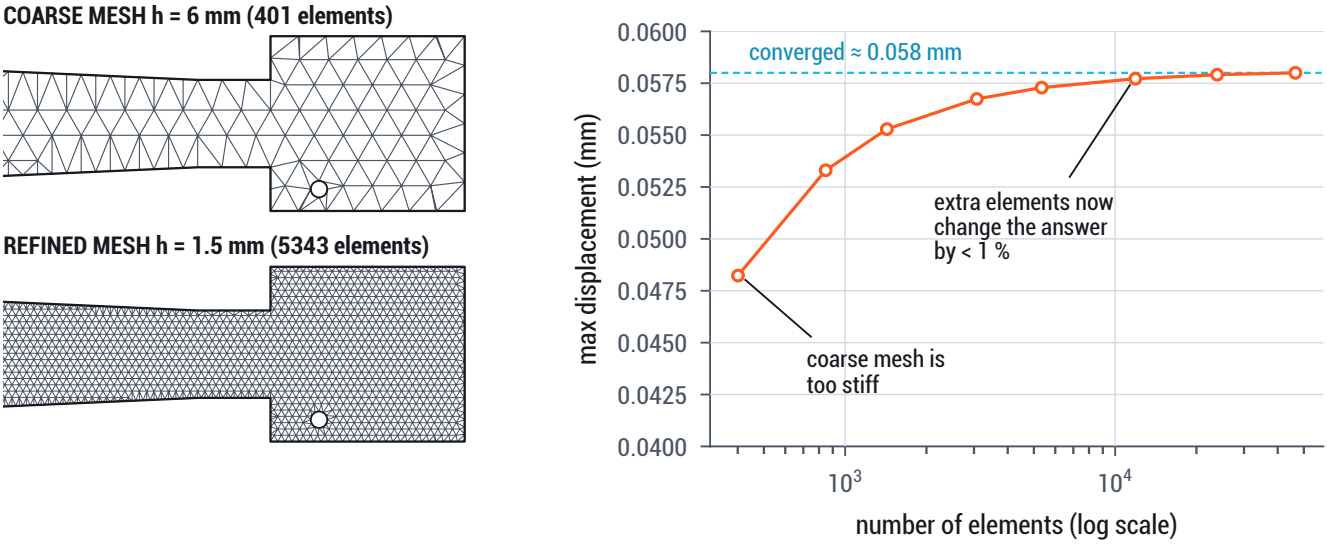

Fig 6.4 Mesh refinement: the same hard-landing test solved with smaller and smaller elements (illustrative simulated output).

MESH REFINEMENT

A coarse mesh is too stiff: here it under-predicts the displacement by 17 %. Re-solve with smaller elements — especially where stress changes quickly, at holes, corners and supports — until the answer stops changing. The result has then **converged**. A finer mesh takes longer to solve, so refine only where it matters.

WORKED EXAMPLE — HAND CHECK

At point P, on top of the arm 150 mm from the centre, the arm acts as a beam. Bending moment M = 55 N × 75 mm = 4125 N·mm. From the CAD section: I = 12 118 mm⁴, distance to the surface y = 10.8 mm.

$\sigma = M \times y \div I = 4125 \times 10.8 \div 12\,118 =$ **3.7 MPa**. The FEA gives 3.5–3.6 MPa at P, so the set-up can be trusted.

EXTERNAL FACTORS THAT MAY AFFECT ANY TEST

Real conditions	Gusts and turbulence off ridges; rain, snow and icing; temperature and altitude (air density, and cold makes polymers such as PA12 more brittle); the slope and hardness of the landing ground.
Simplifications	Parts left out, 2D slices instead of the full 3D product, an equivalent static load used for an impact, perfect bonding assumed between parts.
Inputs	Library material data, not the actual batch; manufacturing defects (voids in a print, machining marks); wrong units, constraints or load direction; a coarse mesh.
Use over time	Fatigue from millions of vibration cycles, wear, UV and moisture ageing — not shown by a single static test.

EXAM INTEL **ANALYSING OUTPUT**

When asked to **explain** an output: quote a **value with units** from the plot or colour bar, say what it means for the product (success or failure) and finish with a **justified change** — then say the test must be re-run. In your project, evaluate outputs the same way.

VALIDATION

The final check is a **physical test** of the chosen design — for SUMMIT-X, a drop test with strain gauges on the arm. If test and simulation agree, the simulation can be trusted for the next design change.

6.5 COMPUTATIONAL FLUID DYNAMICS
SETTING UP A CFD TEST

CFD predicts how fluids — liquids and gases, including air — move around or through a product. The **fluid domain** is divided into cells and the solver calculates the speed, direction and pressure of the fluid in each one.

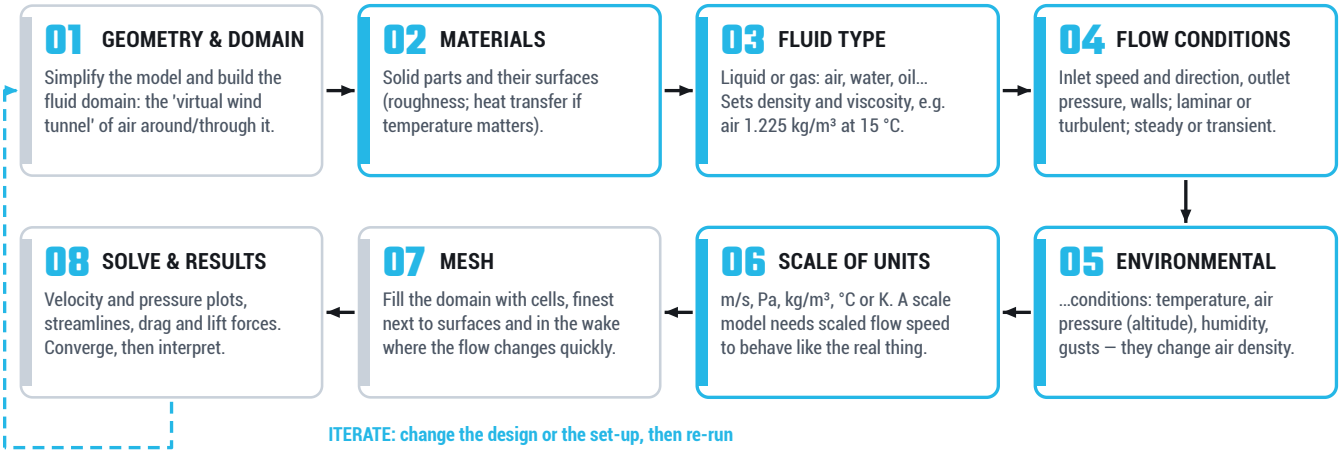

Fig 6.5 The stages of a CFD test. Cyan stages are the set-up decisions named in the course specification.

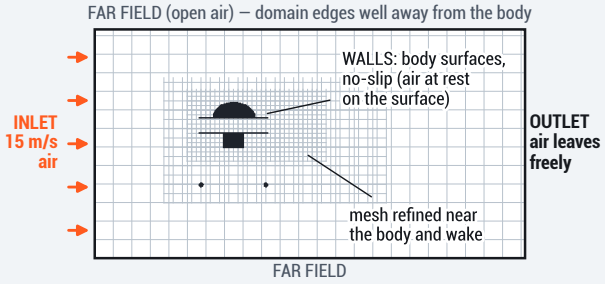

Fig 6.6 The fluid domain — a 'virtual wind tunnel' around a slice through the SUMMIT-X body — and its boundary conditions.

WORKED EXAMPLE — ENVIRONMENTAL CONDITIONS CHANGE THE ANSWER

Air density ρ = p ÷ (R × T), with R = 287 J/(kg·K) and T in kelvin.

Sea level, 15 °C: ρ = 101 325 ÷ (287 × 288.15) = **1.225 kg/m³**
Bidean nam Bian summit (1150 m), 0 °C, pressure ≈ 88 250 Pa: ρ = 88 250 ÷ (287 × 273.15) = **1.13 kg/m³** — 8 % less.

Wind pressure q = ½ρv². At 15 m/s: 0.5 × 1.225 × 15² = **138 Pa** at sea level, 127 Pa on the summit. Thinner air pushes less on the body, but the propellers also make less thrust, so the motors work harder.

STAGE	SUMMIT-X IN A GLEN COE CROSSWIND
Geometry	Slice through the body 20 mm forward of centre: canopy, plates, battery, skids. Screw heads removed.
Materials	Solid, smooth surfaces. No heat transfer (battery and camera heat ignored).
Fluid type	Air: density 1.225 kg/m³, viscosity 1.8 × 10^{-5} Pa·s. Treated as incompressible (true well below about 100 m/s).
Flow conditions	Inlet 15 m/s side wind; outlet open; body walls no-slip; turbulent, **transient** (changes with time).
Environmental conditions	Standard sea-level air, 15 °C. Compare a cold summit (left).
Scale of units	m/s, Pa, kg/m³, °C. Model at 1:1.

SCALE OF UNITS — COMMON ERROR

A model drawn in mm but solved as if in metres is 1000 times too big, so the flow is completely different. A **scale model** only behaves like the real product if the test speed is changed to match.

EXAM INTEL **SET-UP QUESTIONS**

Give an actual value or choice for each stage — "air at 1.225 kg/m³, inlet 15 m/s" — not just the stage name.

6.6 ANALYSING CFD OUTPUT
READING THE AIRFLOW

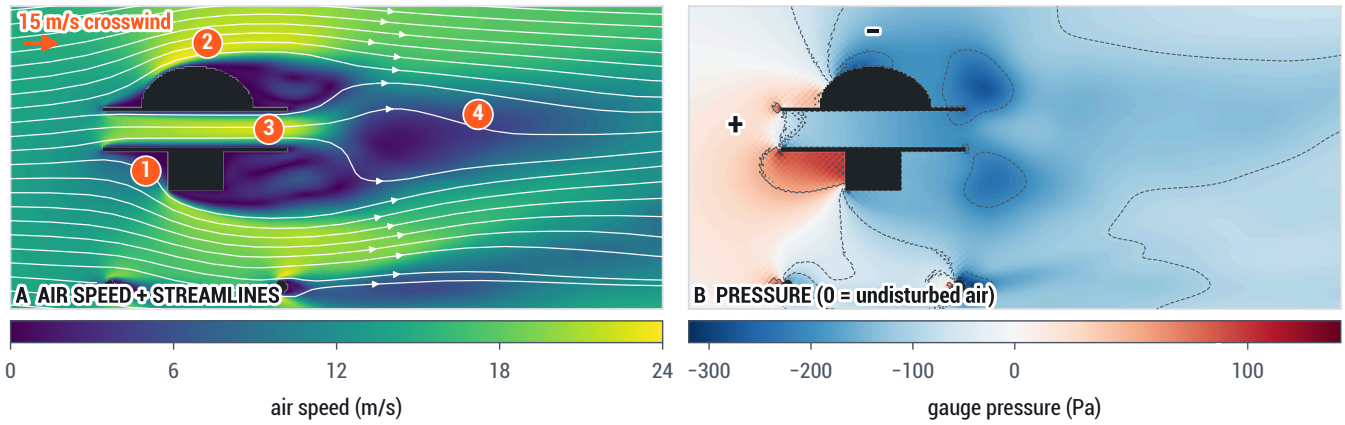

Fig 6.7 Illustrative simulated output: time-averaged flow in a 15 m/s crosswind across the SUMMIT-X body. Computed for this booklet with a 2D lattice-Boltzmann solver at a reduced Reynolds number, scaled to 15 m/s and sea-level air. The pressure colour scale differs either side of 0.

WHAT THE OUTPUT SHOWS

1. **Stagnation** — air slows and stops on the windward faces, so pressure rises (+, red, about +140 Pa — close to the 138 Pa wind pressure in section 6.5).
2. Air **speeds up** over the canopy to about 24 m/s (1.6 × the wind speed); pressure falls (-, blue: suction).
3. Air **jets through the gap** between the frame plates, past the electronics.
4. The flow **separates** at sharp edges, leaving a wide, slow, swirling **wake**.

Streamlines trace the path of the air: close together = fast, spread apart = slow.

DESIGN SUCCESS OR CHANGE?

- High pressure on one side and suction on the other add up to a **side force**. The flight controller must tilt into the wind to hold position, using more battery.
- Suction over the canopy tends to **lift and roll** the drone.
- **Change:** round the battery cover and plate edges so the flow stays attached longer — a narrower wake means less drag. Re-run to compare.
- The air jet between the plates could help **cool the electronics** — a reason not to close the gap.

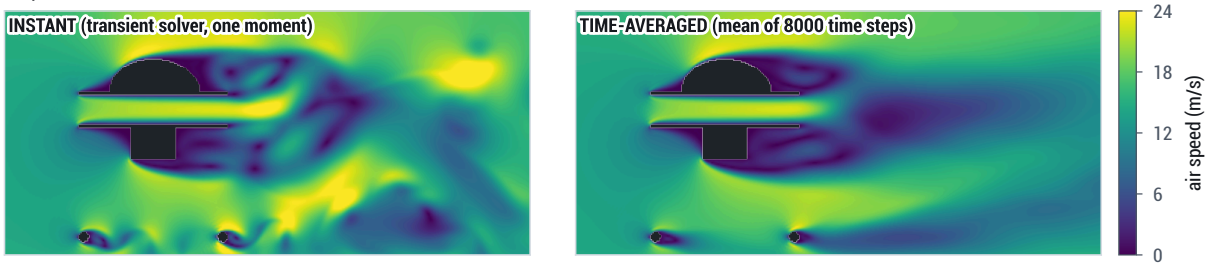

Fig 6.8 Steady or transient? A **transient** analysis follows the flow through time and shows vortices shedding from the body (they buffet the camera). Averaging over time gives the steady loads used for design.

QUICK CHECK 6.2

1 Using Fig 6.7, explain why the pressure is highest on the windward face of the battery.

2

2 State one reason why a transient CFD analysis would be chosen instead of a steady one.

1

6.7 MECHANICAL ANIMATION
SHOWING HOW IT MOVES AND GOES TOGETHER

A mechanical animation uses the CAD assembly itself — real parts, joints and limits — to show how a product **moves, operates and is assembled**. Because motion follows the joints, it also finds collisions.

JOINT	FREEDOM	EXAMPLE
Rigid	none	arm clamped in mount
Revolute	1 rotation	propeller on motor
Slider	1 slide	mount onto arm
Cylindrical	rotate + slide, 1 axis	arm in bore, unclamped
Pin-slot	rotate + slide in slot	pin in a slot
Planar	slide in plane + rotate	part on a flat face
Ball	3 rotations	ball-jointed camera

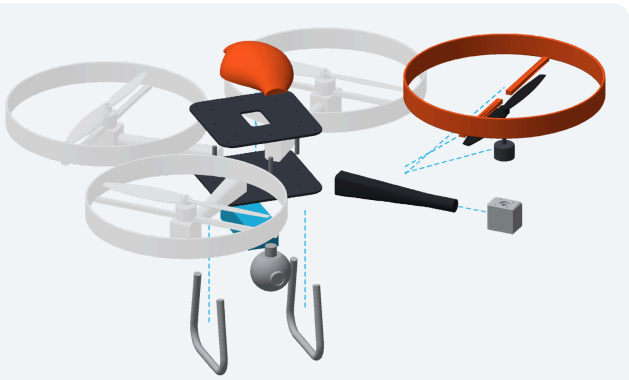

Fig 6.9 Exploded view rendered from the SUMMIT-X assembly: one arm assembly exploded, the others faded. Cyan trail lines show each part's path.

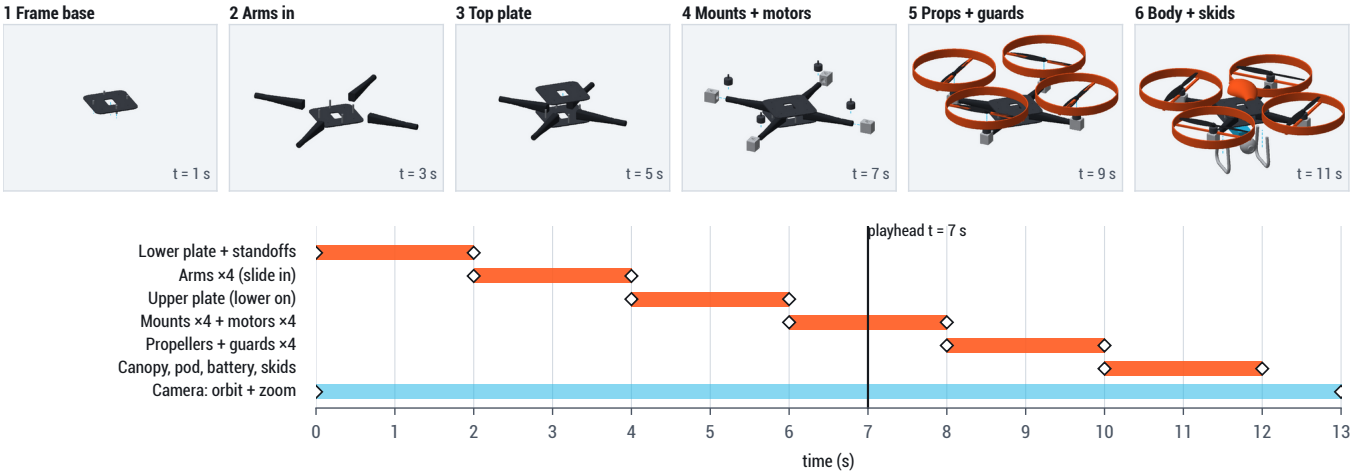

Fig 6.10 Assembly-sequence storyboard: keyframes rendered from the real model (top) and the animation timeline (bottom). Diamonds mark keyframes.

BUILDING THE ANIMATION

- **Joints** set how parts may move; **joint limits** stop motion (a camera that tilts only 0–90°).
- **Motion links** tie joints together — all four propellers linked, diagonal pairs spinning the same way.
- **Timeline**: each action (move, rotate, explode, show, hide) is a bar between two **keyframes**; a camera track moves the view.
- **Assembly sequence**: parts move along **trail lines**; an explosion played backwards is the build order. **Callouts** name parts and fixings.

WHY ANIMATE?

- Shows **operation** — propellers spinning inside guards, the camera panning.
- Checks **clearance**: the Ø254 propeller has only 8 mm to the Ø270 guard on each side.
- Explains **assembly and maintenance** to people who cannot read engineering drawings.

QUICK CHECK 6.3

1 Name the joint between a propeller and its motor and state its freedom of movement.

2

6.8 INTERPRET THIS OUTPUT
MISSION TASK 6.4 — LIGHTER AND WINDIER

MISSION TASK 6.4 QUESTION-PAPER STYLE · 20 MARKS

Design B is the arm **shelled to a 1.5 mm wall**. Both designs were tested with the hard-landing set-up in Fig 6.2 (55 N).

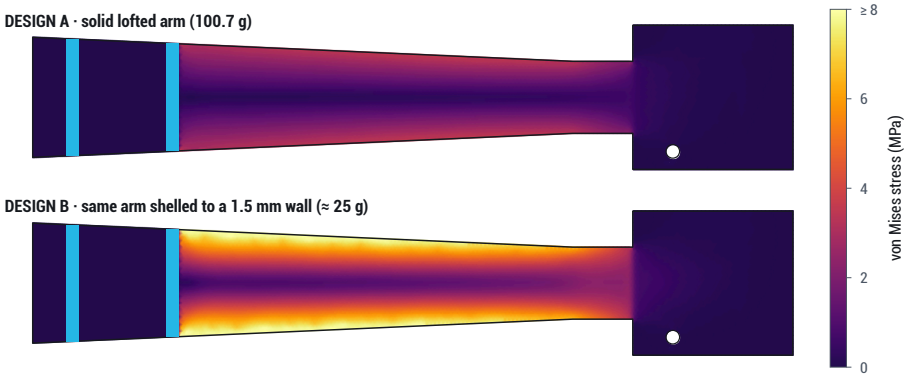

Fig 6.11 Illustrative simulated output: von Mises stress in Design A and Design B (same colour scale).

RESULT (HARD LANDING, 55 N)	DESIGN A — SOLID ARM	DESIGN B — SHELLED ARM
Arm mass	100.7 g	24.7 g
Peak von Mises stress — arm (CFRP)	4.6 MPa	11.5 MPa
Peak von Mises stress — mount (6061-T6, yield 276 MPa)	1.34 MPa	1.78 MPa
Maximum displacement	0.058 mm	0.134 mm

1 **(a)** Calculate the factor of safety for the motor mount in Design B. Show your working.

2

(b) The CFRP has a failure strength of 500 MPa. Calculate the factor of safety for the Design B arm and explain why yield strength is not used for CFRP.

3

(c) Using the output, explain whether Design B should replace Design A.

4

MISSION TASK 6.4 **CONTINUED**

2 In both designs the peak arm stress is found beside the outer bolt hole. Explain why.

2

To see how the prop guards behave on a ridge, the team ran a CFD test of SUMMIT-X hovering in a 15 m/s crosswind (Fig 6.12). The propeller was modelled as a disc that pushes air downwards with the thrust needed to hover.

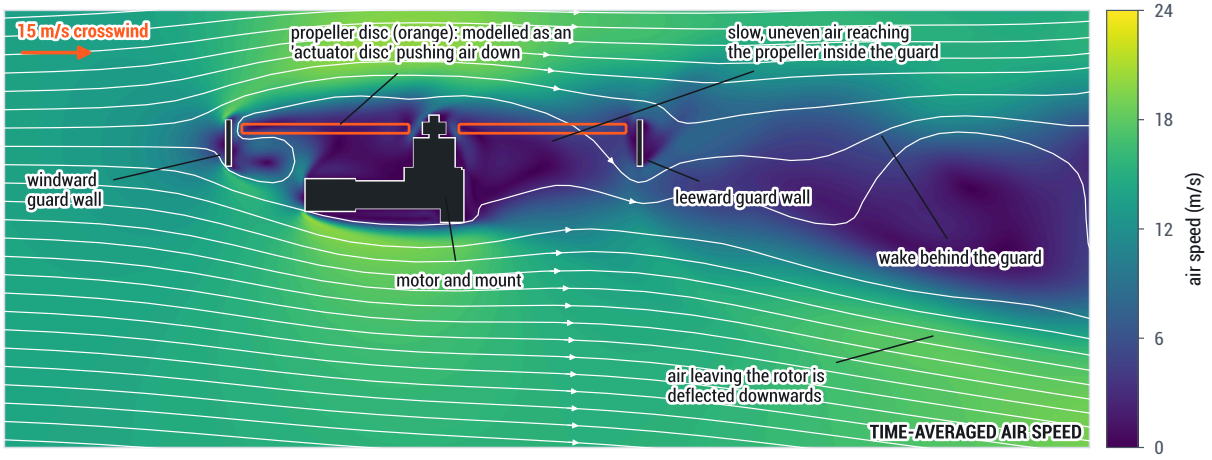

Fig 6.12 Illustrative simulated output: time-averaged air speed in a slice through one arm, motor and prop guard (2D lattice-Boltzmann solver, scaled to 15 m/s).

3 **(a)** Describe how the air moves through and around the prop guard in Fig 6.12.

2

(b) Explain how the crosswind could affect SUMMIT-X's ability to hover over a casualty. Use evidence from the output.

3

(c) Describe two external factors in Glen Coe that were not included in this test, and how each could change the result.

4

07

CHAPTER 07

CAD/CAM & MODEL INFORMATION

The SUMMIT-X model is finished — now it has to become real. Learn how to turn vectors and solids into files that a laser cutter, vinyl cutter, 3D printer or CNC machine can trust, and how the numbers hidden inside the model help you make it with less waste.

LEARNING INTENTIONS

- Prepare 2D vectors for laser cutting and vinyl cutting
- Prepare 3D models for 3D printing and CNC machining
- Gather model information and use it to improve environmental outcomes

SUCCESS CRITERIA

- I can set up a laser file with closed paths, colour mapping, kerf and cut order
- I can justify export, orientation and support decisions for FDM and SLS
- I can calculate mass, material waste and nesting yield from model data

7.1 2D VECTOR MANIPULATION FOR CAD/CAM
VECTORS FOR THE LASER CUTTER

The SUMMIT-X frame plates start life as a **DXF** exported from a Fusion sketch. A laser cutter treats every vector in that file as an instruction, so the file must be **machine-ready** before it is sent.

SIX CHECKS BEFORE YOU PRESS "SEND"

01 **Closed paths.** Each cut shape must be one closed loop. Gaps stop a part dropping out; duplicate or overlapping lines are cut twice, scorching the edge and wasting time. Join nodes and delete duplicates.

02 **Hairline strokes.** Cut and score lines are set to the driver's hairline weight (typically 0.1 mm or less). A thicker stroke may be read as an area to raster engrave.

03 **Colour mapping.** Each process has its own RGB colour, linked in the driver to a power, speed and frequency — here red = cut, blue = score, black fill = raster engrave. The mapping varies between machines, so always check.

04 **Text to outlines.** Convert text to paths (outlines) so the laser computer does not need the font and the letter shapes cannot change.

05 **Cut order: inside first.** Engrave, then score, then holes and slots, and the outer profile **last**. Once the outline is cut the part can drop or shift, so any later cut would be misplaced.

06 **Scale and units.** Check the file imports 1:1 in millimetres. The plate DXF stores its units in its header (`$INSUNITS = 4` means millimetres).

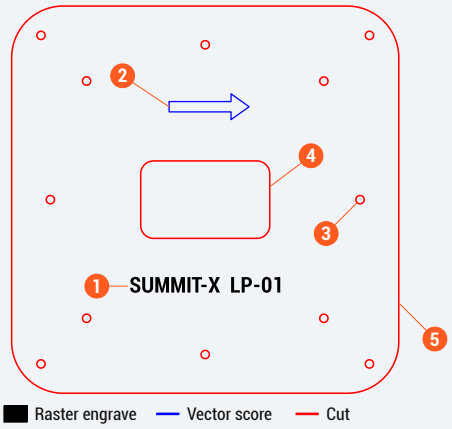

Fig 7.1 SUMMIT-X lower plate from the real DXF: 150 × 150, R20 corners, 50 × 30 R5 cable slot, 12 × Ø3.2 holes. Engraved label and score mark added for this example. Badges = cut order.

SAFETY FIRST

Never cut carbon-fibre composite on a school laser — burning resin gives off hazardous fumes and dust. The production plates go to a specialist subcontractor; the team prototypes the plate in 3 mm acrylic from the same DXF.

RASTER OR VECTOR ENGRAVING?

	RASTER ENGRAVING	VECTOR ENGRAVING (SCORING)
How it works	The head sweeps back and forth line by line, like a printer, firing wherever the artwork is filled	The head follows the vector path once at low power, like a pen
Best for	Filled text, logos, photographs, shaded areas	Fine lines, outlines, fold or alignment marks
Time depends on	The *area* engraved and the resolution (lines per mm) — slow	The *length* of the path — fast

EXAM INTEL EXPLAIN, DON'T LIST

"Convert text to outlines" earns a mark only with the reason: **the font may not exist on the laser computer**, so the text would be substituted or lost. Always state the action *and* the consequence.

7.2 2D VECTOR MANIPULATION FOR CAD/CAM
KERF AND NESTING

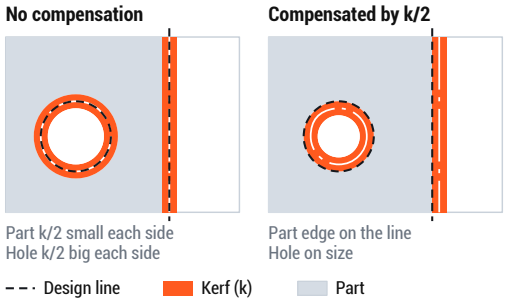

Fig 7.2 Kerf compensation (kerf drawn oversize)

The **kerf** is the width of material the beam removes — for a CO_2 laser in 3 mm acrylic, roughly 0.1–0.3 mm depending on focus, power and lens. The beam centre follows the vector, so half the kerf is lost on each side of every line: outer profiles come out **small** and holes come out **big**.

Compensate by offsetting outer profiles **outwards** by k/2 and holes **inwards** by k/2, in CAD or with the laser software's kerf-offset setting. With k = 0.2 mm and no compensation, the plate is cut 149.8 × 149.8 and each Ø3.2 hole becomes Ø3.4.

Nesting is arranging parts on a sheet so that as little material as possible is wasted. The proportion of the sheet that becomes parts is the **yield**.

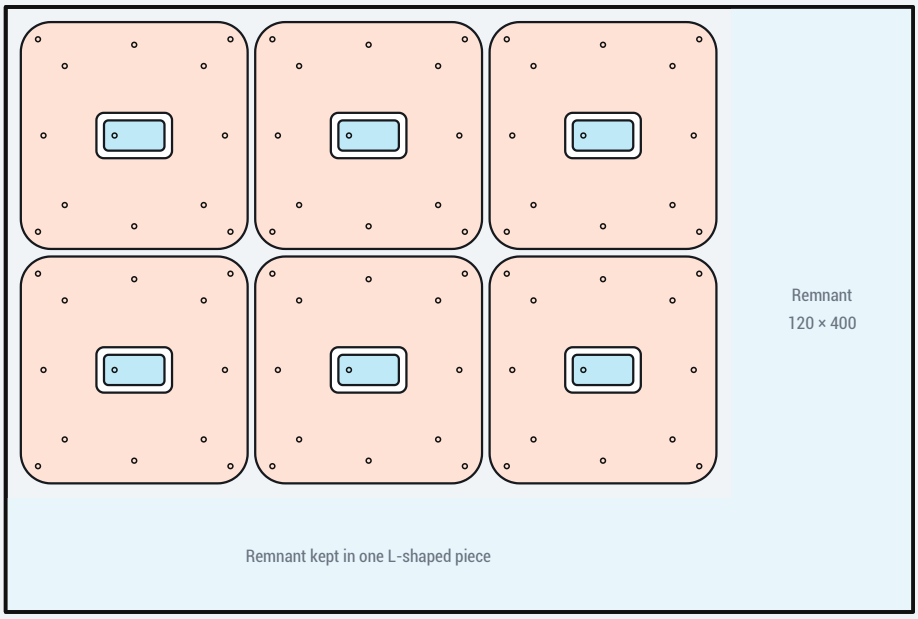

Fig 7.3 Six frame plates (three drones) nested on a 600 × 400 × 3 sheet (scale 1:5): 10 mm margins, 5 mm gaps, an engraved 40 × 20 R3 ID tag with a Ø3.2 hole nested inside each slot offcut, remnant kept in one piece.

WORKED EXAMPLE — NESTING YIELD

A rounded corner removes an r × r square minus a quarter circle, so four corners remove $(4 - \pi)r^2$.

Plate outline $150^2 - (4 - \pi) \times 20^2$	22 156.6 mm²
− slot $50 \times 30 - (4 - \pi) \times 5^2$	− 1478.5 mm²
− holes $12 \times \pi \times 1.6^2$	− 96.5 mm²
Net plate area	**20 581.6 mm²**

Yield = (6 × 20 581.6) ÷ (600 × 400) × 100 = **51.5 %**. Adding six tags (784.2 mm² each) raises it to **53.4 %**.

NESTING GOOD PRACTICE

- Leave a margin at the sheet edge and gaps between parts so heat does not distort thin webs.
- Rotate and interlock parts; put small parts inside the offcuts of big ones.
- Use **common-line cutting** where straight edges can share one cut.
- Keep wood grain or composite weave in the same direction on every part.
- Push parts into one corner so the remnant stays one usable piece.
- Choose a sheet that suits the job (see Quick Check 7.1).

7.3 2D VECTOR MANIPULATION FOR CAD/CAM
VINYL CUTTING

A vinyl cutter drags a small knife along each vector. It cuts through self-adhesive vinyl but not its backing liner — a **kiss cut**. SUMMIT-X uses it for prop-guard warnings and hangar-door lettering.

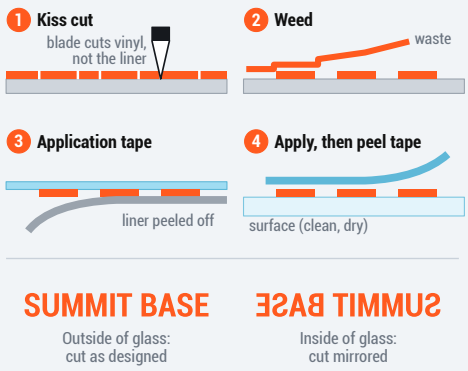

Fig 7.4 Vinyl cutting sequence (not to scale) and a mirrored cut

01 **Cut** — the knife follows every closed path.

02 **Weed** — unwanted vinyl is peeled off the liner.

03 **Application tape** — lifts the design off the liner as one piece, letters still spaced correctly.

04 **Apply** — press onto a clean surface; peel off the tape.

PREPARING THE VECTORS

- Vectors only: closed paths and outlined text. The knife cannot "fill", so colour comes from the vinyl; each colour is a separate cut, layered using alignment marks.
- Avoid hair-thin strokes and tiny text — they tear when weeded. A **weeding border** drawn round the design makes weeding easier.
- A decal stuck on the **inside** of glass and read from outside must be cut **mirrored**.

QUICK CHECK 7.1 LASER AND VINYL

1 A technician cut the outer profile of an acrylic test plate first, then the twelve Ø3.2 holes. Several holes were out of position. Explain why.

2

2 The kerf is 0.25 mm. State the diameter of each hole if the vectors are not compensated.

1

3 Six plates are nested on a 500 × 330 sheet instead (10 mm margins, 5 mm gaps). Calculate the new yield.

2

4 Explain why the hangar-door lettering, applied to the inside of the glass, is cut as a mirror image.

1

7.4 3D MODEL MANIPULATION FOR CAD/CAM
PREPARING MODELS FOR 3D PRINTING

A 3D printer does not read the exact solid in Fusion. The model is exported as an **STL** mesh of triangles (facets) and then **sliced** into layers.

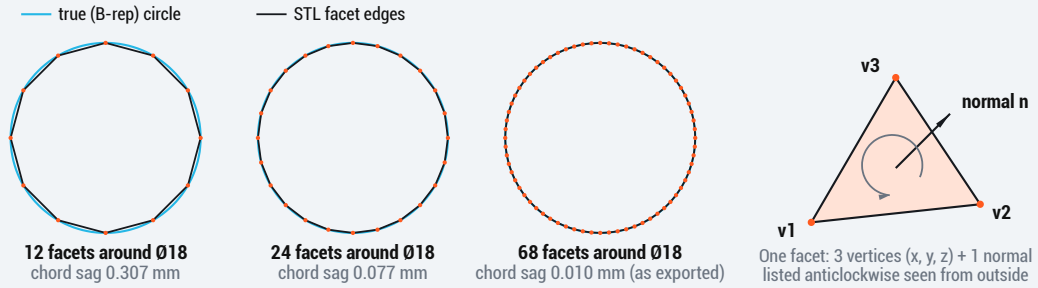

Fig 7.5 Tessellation of the Ø18 arm bore. Chord sag = r(1 − cos(180°/n)). The real mount STL uses 68 facets around the bore.

EXPORT AND CHECK THE MESH

Resolution	Set the chord (sag) tolerance and angle: too coarse and curves print as flats; too fine and the file balloons. The mount STL has 3228 facets (161 kB); its volume is 0.02 % above the exact 33 657 mm³.
Units	STL stores numbers but **no units**. A canopy read as inches is 25.4 times too big — check the size on import.
Watertight	The mesh must be **manifold**: closed, every edge shared by exactly two facets, normals outwards, no self-intersections. All 4842 edges of the mount mesh pass.
Thin walls	Check against the process minimum (often about 1 mm for SLS nylon); the canopy shell is 2 mm.

ORIENTATION AND SLICING

Orientation decides the support needed, where "stair-stepping" shows on gentle slopes, strength (FDM parts are weakest between layers) and build time.

The **slicer** cuts the mesh into layers and plans each layer's walls, infill and supports. For FDM it writes **G-code**: `G1 X12.4 Y30.2 E0.041 F1800` means move in a straight line to X12.4 Y30.2, feeding 0.041 mm of filament (relative extrusion), at 1800 mm/min. SLS machines use their own build-preparation software.

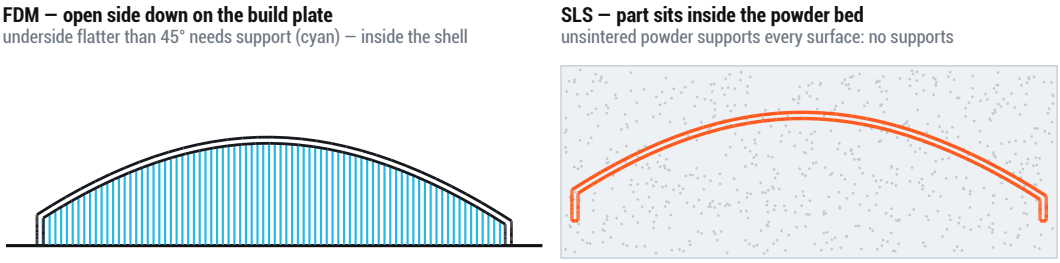

Fig 7.6 Canopy profile from the real STL (centre-line slice). Its whole underside is flatter than 45°, so FDM needs support right across the inside; SLS needs none.

	FDM (FUSED DEPOSITION MODELLING)	SLS (SELECTIVE LASER SINTERING): CANOPY AND PROP GUARD
Supports	Under overhangs flatter than about 45°; removed after, leaving marks	**None** — unsintered powder supports the part, so parts can be packed in 3D
Layer height	Typically 0.1–0.3 mm: thinner = smoother but slower	Set by the machine, typically about 0.1 mm
Infill	Percentage and pattern (e.g. gyroid) trade strength for material and time	None — parts are solid; enclosed hollows need powder escape holes

7.5 PREPARING THE MOTOR MOUNT FOR CNC

3D MODEL MANIPULATION FOR CAD/CAM

The motor mount is milled from an aluminium **billet**. In CAM the programmer defines the stock, set-ups, coordinate system and tools, then generates **toolpaths**.

Stock. A 44 × 34 × 44 sawn 6061-T6 billet: 2 mm a side for the profile, 1 mm to face the top, extra length for the vice to grip.

Work coordinate system (WCS). Toolpaths are written relative to a WCS origin, which the machinist sets by probing the real part. In set-up 1, X0 Y0 is the motor axis and Z0 the finished top face. Climb milling an outside profile means travelling clockwise round it.

- **Facing** — flattens the sawn top to a known Z0.
- **Adaptive clearing** (roughing) — constant cutter engagement lets it cut deep and fast.
- **Contour** (finishing) — one light pass for accuracy and finish.
- **Drilling** cycles — spot, peck-drill, tap.
- **Boring** — a single-point bar finishes a hole to a close tolerance such as H7.

SET-UP	OPERATIONS (ONE CLAMPING CANNOT REACH EVERY FACE)
1 Top up	face · rough + finish profile (the cutter path forms the R4 corners) · spot, drill Ø2.5 and tap 4 × M3 · drill Ø8 · mill Ø14 counterbore · ball-nose finish the variable-radius fillet
2 Base up	face off the grip stock to 36 high · cut the 2 mm clamp slot
3 Inner end up	rough and bore Ø18 H7 × 28 · entry chamfer
4 Side up	drill the Ø3.4 pinch-bolt hole through

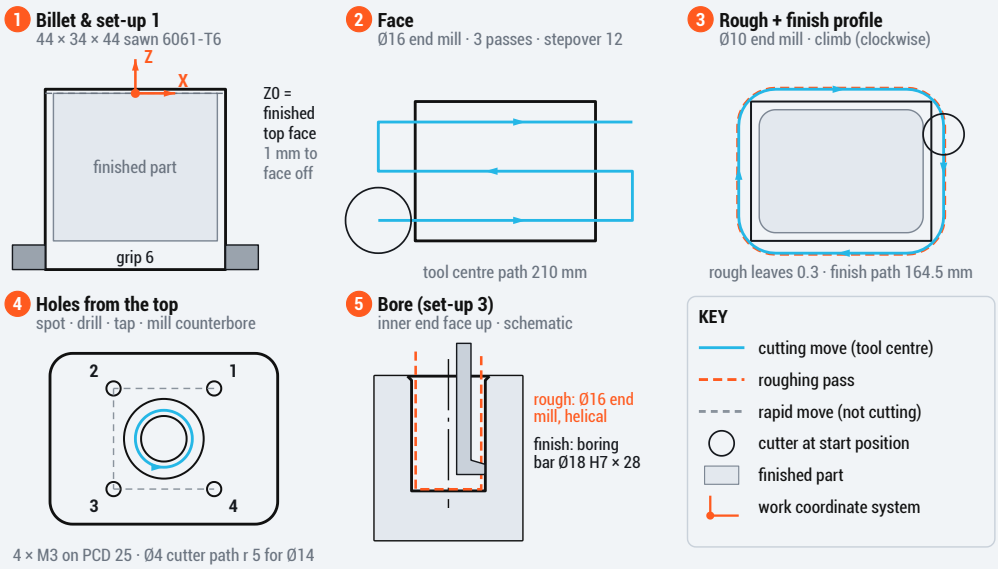

Fig 7.7 Motor-mount toolpaths computed from the model geometry (tool-centre paths). The finishing path is the profile offset by the cutter radius: 2(40 − 8) + 2(30 − 8) + 2π × 9 = 164.5 mm.

COMMUNICATING SURFACE FINISH AND DATUMS

The production drawing (symbols in **Chapter 04**) is the CAM programmer's brief. **Datum features** show what everything is measured from, so each set-up's WCS is placed on, or probed from, those datums and tolerances do not stack up between set-ups. **Surface texture** symbols say which faces must be machined and how fine: a fine Ra on the H7 bore calls for a boring bar at a slow feed. A **lay** symbol can set the direction of the final pass.

GATHERING AND USING MODEL INFORMATION

7.6 THE NUMBERS INSIDE THE MODEL

CAD and CAM software report **tool pathways**, **volume**, **centre of mass** and **mass**. These figures let the team cost, check and improve the design before any material is cut.

TOOL PATHWAYS AND CYCLE TIME

CAM **simulation** plays the toolpaths against a virtual billet. It shows gouges and collisions with the holder or vice, material left behind, the path length and the **cycle time**.

WORKED EXAMPLE — FINISHING PASS

Ø10 carbide cutter, cutting speed 250 m/min, 3 flutes, 0.04 mm per tooth:
spindle speed = 1000 × 250 ÷ (π × 10) = 7958 ≈ 8000 rev/min
feed = 8000 × 3 × 0.04 = 960 mm/min
time = 164.5 mm ÷ 960 mm/min = 0.171 min ≈ **10.3 s**

The CAM total adds every operation, rapid move and tool change.

MASS PROPERTIES OF THE MOTOR MOUNT

Mass	90.9 g
Volume	33 657 mm³
Density (6061-T6)	2700 kg/m³
Surface area	9660 mm²
Centre of mass	(1.42, -0.01, 18.01) mm, measured from the motor axis at the base

WORKED EXAMPLE — MASS = DENSITY × VOLUME

$V = 33\,657\ mm^3 = 33\,657 \times 10^{-9}\ m^3 = 3.3657 \times 10^{-5}\ m^3$
$m = 2700\ kg/m^3 \times 3.3657 \times 10^{-5}\ m^3 = 0.0909\ kg =$ **90.9 g**
Short cut: 2700 kg/m³ = 0.0027 g/mm³, so 33 657 × 0.0027 = 90.9 g.

Reading the centre of mass. The mount's centre of mass is 1.4 mm outboard of the motor axis because the arm bore removes material from the inboard half; z = 18.01 is mid-height; y is almost zero because the part is nearly symmetrical (the variable fillet is larger on the +y side, so it removes a little more material there). For the whole 2.19 kg drone the centre of mass is 1.3 mm forward of centre. The motors sit 225 × cos 45° = 159.1 mm ahead of and behind the centre, so the front pair carries ½ × (1 + 1.3 ÷ 159.1) = **50.4 %** of the weight and the rear pair 49.6 % — small enough for the flight controller to correct automatically.

USING MODEL INFORMATION TO REDUCE ENVIRONMENTAL IMPACT

STRATEGY	MODEL INFORMATION	SUMMIT-X EVIDENCE
Material efficiency	Billet vs part volume	Billet 44 × 34 × 44 = 65 824 mm³ (177.7 g); part 33 657 mm³, so 48.9 % of every billet becomes swarf (Mission Task 7 asks for the mass per drone). Use near-net-shape stock; keep swarf clean for recycling.
Nesting yield	Part vs sheet area	51.5 %; 53.4 % with tags in the slot offcuts; a right-sized sheet raises it further. Store and reuse remnants.
Energy in production	CAM cycle time	Energy = machine power × cycle time. Fewer set-ups, adaptive roughing and shorter rapids save time and energy.
Lightweighting	Volume and mass after a model change	The arm is modelled solid (72 410 mm³, 100.7 g). Shelling it saves mass for longer flights per charge: Chapter 06 tested a 1.5 mm wall (24.7 g per arm); Mission Task 7 asks you to work out the saving for a 2 mm wall. FEA must re-check the strength.
After production	Material and mass of each part	Aluminium can be recycled again and again using a small fraction of the energy of new metal; thermoset carbon composites are hard to recycle; unsintered SLS powder is partly reused. Bolted joints (the pinch-bolt clamp) let materials be separated at end of life. Lower mass means less fuel to transport every unit.

MISSION TASK 7 **CAD/CAM FOR SUMMIT-X · 18 MARKS**

1 The canopy is to be SLS printed in PA12 nylon; a colleague suggests FDM instead.

Explain **two** ways the preparation of the model and print would change for FDM.

4

2 Explain how the CAM programmer uses the datum features **and** the surface texture symbols on the motor-mount production drawing.

2

3 CAM reports a cycle time of 14 min 30 s per mount on a machine averaging 3.2 kW. Each drone needs four mounts, each cut from a 44 × 34 × 44 billet.

(a) Calculate the energy used to machine the four mounts for one drone, in kWh.

2

(b) Using the model data in section 7.6, calculate the mass of aluminium swarf produced for one drone.

3

4 Each arm (solid, 100.7 g) is shelled to a 2 mm wall: new volume 24 600 mm³, density 1390 kg/m³. Calculate the new mass of the 2.19 kg drone and its percentage reduction.

3

5 Compare the environmental impact of CNC machining the motor mount from an aluminium billet with SLS printing it in PA12 nylon. Refer to production **and** end of life.

4

08

CHAPTER 08

TECHNICAL FILE FORMATS

A model is only useful if the next person can open it. Learn what each file format really stores — and which one to send to the machinist, the laser technician, the print bureau and the client.

LEARNING INTENTIONS

- Describe what .dwg, .dxf, .stl, .step, .iges, .3ds and .vrml files store
- Choose file formats that support software transferability and CAD/CAM

SUCCESS CRITERIA

- I can explain the difference between vector, B-rep and mesh data
- I can choose and justify the right format for each member of the SUMMIT-X team

8.1 VECTORS, SOLIDS AND MESHES

TECHNICAL GRAPHIC FILE FORMATS AND THEIR USE

Every format holds geometry as **vectors** (lines, arcs, circles), a **B-rep** solid ("boundary representation": exact surfaces joined at edges) or a **mesh** (flat triangles approximating the surfaces).

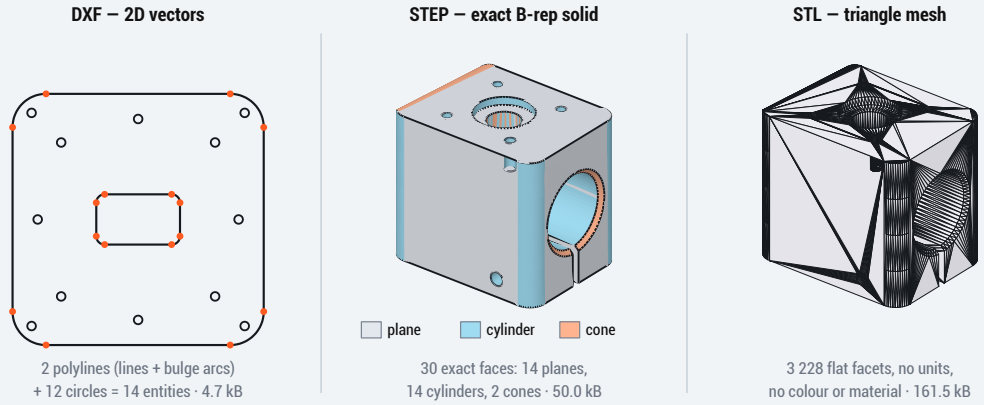

Fig 8.1 Drawn from the real SUMMIT-X export files (plate holes enlarged for clarity). The B-rep stores each face as one exact surface; the mesh breaks the same mount into 3 228 triangles.

FORMAT	WHAT IT STORES	STRENGTHS	LIMITATIONS
TECHNICAL GRAPHICS FILE TYPE			
.dwg drawing format (AutoCAD)	Autodesk's native binary format: 2D and 3D geometry, layers, line types, blocks, dimensions, text, sheet layouts, units	Industry standard for engineering and building drawings (SUMMIT Base plans); fully editable	Proprietary; newer versions may not open in older software
CAD/CAM FILE TYPES			
.dxf drawing exchange format*	Autodesk's openly documented text format: 2D (and some 3D) lines, arcs, circles, polylines, splines, text, layers, colours, units in the header	Imported by nearly all CAD, laser, vinyl and CNC software; readable as text	No solid model; splines, text and dimensions can import differently; units can be misread, causing scale errors
.stl stereolithography / standard tessellation language	Only triangles: three corner points and a normal for each facet, as text or binary	The universal input for 3D-printing slicers; simple to write and check	Approximate; **no units, colour or material**; very large at fine resolution; hard to edit back into a solid

INSIDE THE REAL DXF

The plate file holds just 14 entities: two closed polylines and 12 circles. Each rounded corner is stored as a **bulge** of 0.414 = tan(90° ÷ 4) on a polyline vertex, not as a separate arc. The header line `$INSUNITS 4` declares millimetres.

*The course specification lists .dxf as "direct exchange format"; Autodesk, which created it, calls it drawing exchange (or interchange) format. Recognise both names.

INSIDE THE REAL STL

A binary STL is an 80-byte header, a 4-byte facet count and 50 bytes per facet (normal, three vertices, 2 spare bytes). Mount: 84 + 3 228 × 50 = 161 484 bytes — exactly the file size. Nothing records millimetres.

ILLUSTRATION AND MODELLING FILE TYPES

8.2 EXCHANGE AND VISUALISATION FORMATS

Fusion's own .f3d file keeps the full feature history, but most other software cannot read it. **Neutral** formats such as STEP and IGES carry the geometry between different CAD and CAM systems — this is **software transferability**. Visualisation formats carry meshes with their looks.

FORMAT	WHAT IT STORES	STRENGTHS	LIMITATIONS
.step / .stp ISO 10303 (STEP)	Neutral text file: exact B-rep solids and surfaces, assembly structure, colours, units	The best route between different CAD and CAM systems; exact geometry; compact	Feature history and parameters are lost (a "dumb" solid), so edits need direct modelling
.iges / .igs Initial Graphics Exchange Specification	Neutral text file: curves, wireframe and surfaces (solids are possible)	Read by almost every CAD/CAM system, including older ones; good for surface models	Older and superseded by STEP; surfaces may arrive with gaps that must be "stitched" into a solid; larger files
.3ds 3D Studio	Binary file of triangle meshes, materials, texture-map references, lights, cameras and keyframe animation	Widely read by rendering, animation and visualisation software; keeps materials, lights and cameras	Meshes only — no exact solids; old limits such as about 65 000 vertices per object and short texture file names
.vrml (.wrl) virtual reality modelling language	A plain-text 3D scene: meshes, colours, materials, textures, lights, viewpoints, simple animation and hyperlinks. Files use the .wrl extension	Colour and texture travel with the geometry: interactive 3D viewing and full-colour 3D printing	Meshes, not exact solids; largely replaced by newer web 3D formats; needs a VRML-capable viewer

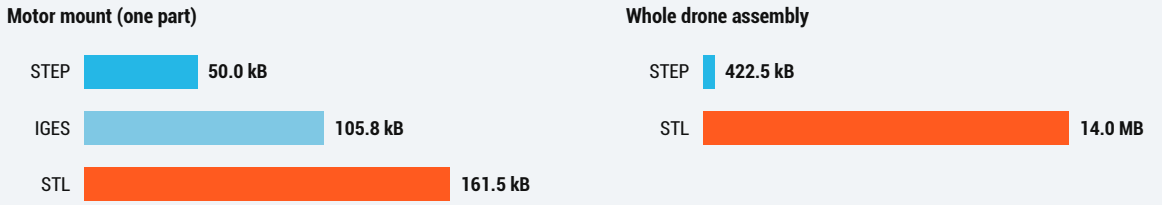

Fig 8.2 Real sizes of the SUMMIT-X export files. The mesh grows with every curved surface; the whole-drone STL is about 33 times the size of its STEP file.

STEP AND IGES COMPARED — THE REAL MOUNT FILES

The STEP file (AP214, units mm) stores the 30 faces as their true types: **14 planes, 14 cylinders and 2 cones**. The IGES export of the same part stores all 30 faces as spline (NURBS) surfaces and is more than twice the size. A CAM system reading the STEP file can select the bore as a true cylinder.

COMMON ERRORS

Sending an STL to a machinist: CAM gets facets, not true cylinders, so bores cannot be selected or are cut faceted. Forgetting that STEP and IGES lose the feature tree. Not checking units: a part read as inches is 25.4 times too big.

EXAM INTEL EXPLAIN A FORMAT CHOICE

Link the format to **what it stores** and to **what the receiver needs**: "STEP, because it keeps exact B-rep geometry, so the CAM software can machine true cylinders" scores; "STEP, because it is compatible" does not.

8.3 SOFTWARE TRANSFERABILITY
CHOOSE THE RIGHT FORMAT

Ask: **what does the receiver's software need** — and **will they edit the file or only use it**?

WHO RECEIVES IT	SUMMIT-X FILE	WHY THIS FORMAT
Machinist / CAM programmer	Motor mount **.step** + PDF drawing	Exact cylinders and planes for accurate toolpaths; the drawing adds tolerances, surface texture and datums.
Supplier with older CAM	Motor mount **.iges**	A neutral fallback when the software cannot read STEP.
Laser technician	Lower plate **.dxf** (mm)	Flat closed vectors; colours map to cut, score and engrave.
3D print bureau (SLS)	Canopy and guard **.stl**	Every slicer reads it; state "mm" on the order (STL has no units).
Visualisation artist	Assembly **.3ds**	Meshes with materials, lights and cameras for renders.
Client's web viewer	Assembly **.wrl** (VRML)	Colour travels with the model; spin and zoom it without CAD.
Architect, SUMMIT Base	Floor plans **.dwg**	Native, fully editable drawings with layers for services.

MISSION TASK 8 **SEND THE RIGHT FILE · 9 MARKS**

1 The print bureau opens the canopy STL and finds it is 25.4 times too large. Explain why this happened and state how it could have been prevented.

3

2 Explain why the motor mount is sent to the machinist as a STEP file rather than an STL file.

2

3 Trustees will explore a coloured SUMMIT-X model online. Explain why a VRML (.wrl) file is sent, not a STEP file.

2

4 The mount STL (161.5 kB) is larger than its STEP file (50.0 kB) yet less accurate. Explain why.

2

09

CHAPTER 09

THE BUILT ENVIRONMENT

SUMMIT-X needs a home. Before anyone digs a trench for the new drone hangar, a whole team reads plans and surveys of a sloping former forestry depot near Glencoe. This chapter teaches you to read, draw and judge those drawings.

LEARNING INTENTIONS

- Know who creates and uses built-environment drawings, and what each needs
- Know the standards, layout and use of location, site and floor plans, including electrical, plumbing and services layers
- Read topographical, underground, drainage and feature surveys

SUCCESS CRITERIA

- I can explain the needs of a named user and link them to a drawing
- I can read levels and contours, find slope aspect and calculate a gradient
- I can draw BS building symbols correctly on a layered floor plan

9.1 CREATORS AND USERS
ONE SITE, MANY READERS

SUMMIT Base is a single-storey hangar and operations building for SUMMIT-X on a former forestry depot near Glencoe village (a fictional site). Everyone reads the same drawing package, but each reader needs something different from it.

CREATOR / USER QP	ROLE → WHAT THEY NEED FROM THE DRAWINGS
Designers	Develop the scheme → surveys of levels, boundaries and features.
Architects	Lead the design and applications → surveys to set out the building and its floor level.
Landscape architects	Design outside spaces → contours, aspect, trees, paving, seating, lighting.
Conservation bodies	Protect heritage and nature → the effect on trees, the burn and old buildings.
Building surveyors	Survey buildings and check work → measured plans to record defects.
Quantity surveyors	Control cost → lengths, areas and counts: metres of drain, number of sockets.
Town planners	Assess the application → location plan edged red, site plan, access, trees.
Interior designers	Plan interiors → room sizes, door swings, windows, the electrical layer.
Construction trades	Build it → each trade's own layer, with dimensions and levels.
Prospective purchasers	Decide whether to buy → simple floor plans, boundary, parking, orientation.
Clients	Pay for and approve the project → drawings they can understand quickly.

FOR THE PROJECT YOU MAY ALSO MEET PROJECT

Architectural technicians	detailed, layered CAD drawings	**Model-makers**	contours and plans to build models
Consultant engineers	foundation and drainage design	**Suppliers**	quantities and specifications
Communities	simple plans and visuals	**Production and planning**	the order of the build
The general public	clear drawings on the planning portal		

EXAM INTEL EXPLAINING A USER'S NEEDS

A full answer names a **specific feature** of a drawing *and* says **what the user does with it**: "The quantity surveyor needs the electrical layer because it can be printed on its own to **count** the lamps and sockets for the cost estimate."

QUICK CHECK 9.1

1 Explain why the electrician and the town planner would ask for **different** drawings of SUMMIT Base.

2

9.2 PLANNING DRAWINGS
LOCATION PLANS

A **location plan** answers one question: *where is the site?* It is the first drawing a town planner opens.

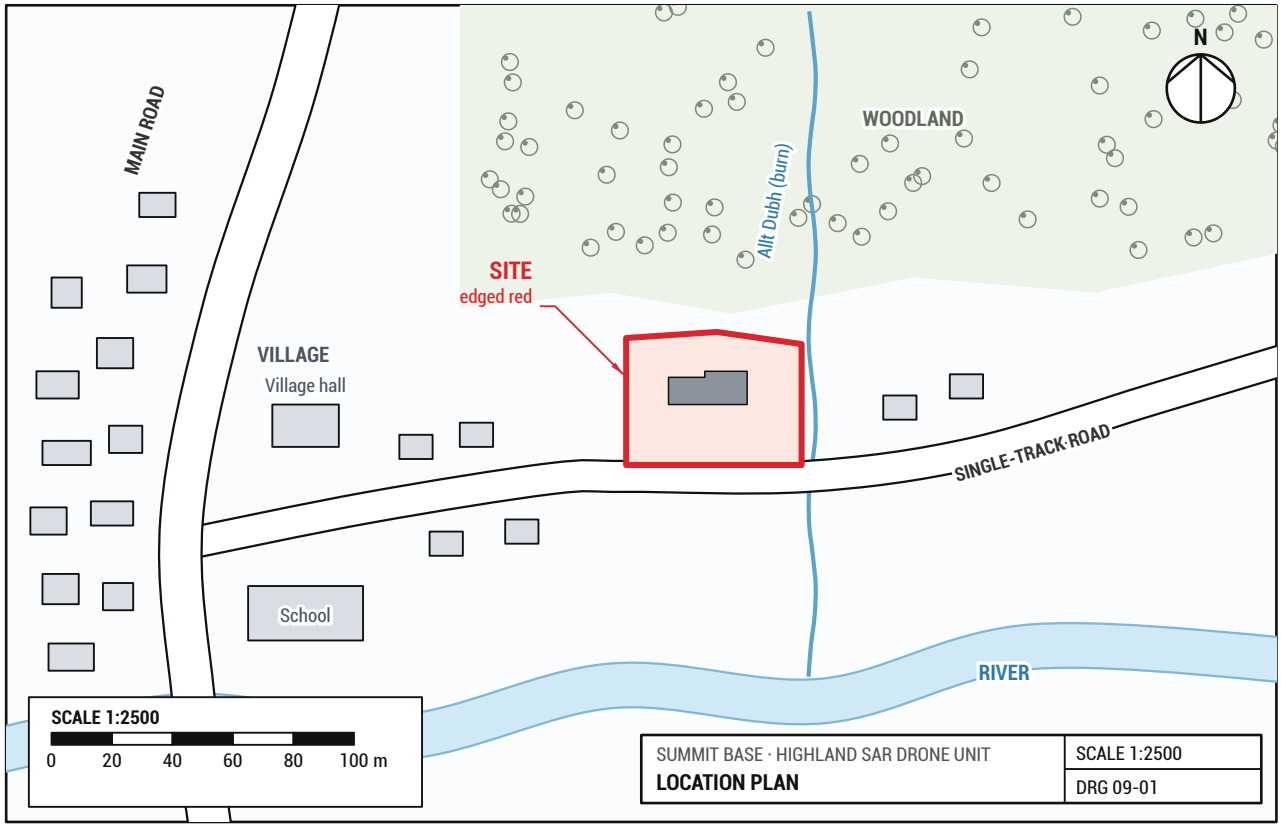

Fig 9.1 Location plan of SUMMIT Base at 1:2500. The surroundings are fictional, drawn to show the conventions.

STANDARDS FOR A LOCATION PLAN

- Scale **1:1250** (towns) or **1:2500** (rural sites), with a scale bar.
- The application site **edged red**; other land owned by the applicant edged blue.
- Enough roads and buildings around the site for anyone to find it.
- A **north point**, and a title block: project, title, scale, drawing number.
- Usually based on an Ordnance Survey map.

EVERY PLANNING DRAWING NEEDS…

ITEM	WHY
Scale + scale bar	the bar still works if the drawing is enlarged or reduced
North point	orients plans, shadows and slope aspect
Title block	identifies the project, drawing, scale and number
Key	explains symbols, line types and colours

DRAWING	TYPICAL SCALE	SHOWS
Location plan	1:1250 / 1:2500	the site, edged red, in its neighbourhood
Site plan	1:200 / 1:500	boundary, building footprint, access, parking, levels, trees, drainage (9.3)
Floor plan	1:50 / 1:100	rooms, walls, doors, windows; electrical, plumbing and services layers (9.8–9.9)

9.3 PLANNING DRAWINGS
THE SITE PLAN

The **site plan** shows the proposed building on its plot: where it sits, how people and vehicles reach it, what happens to the trees and where the water goes.

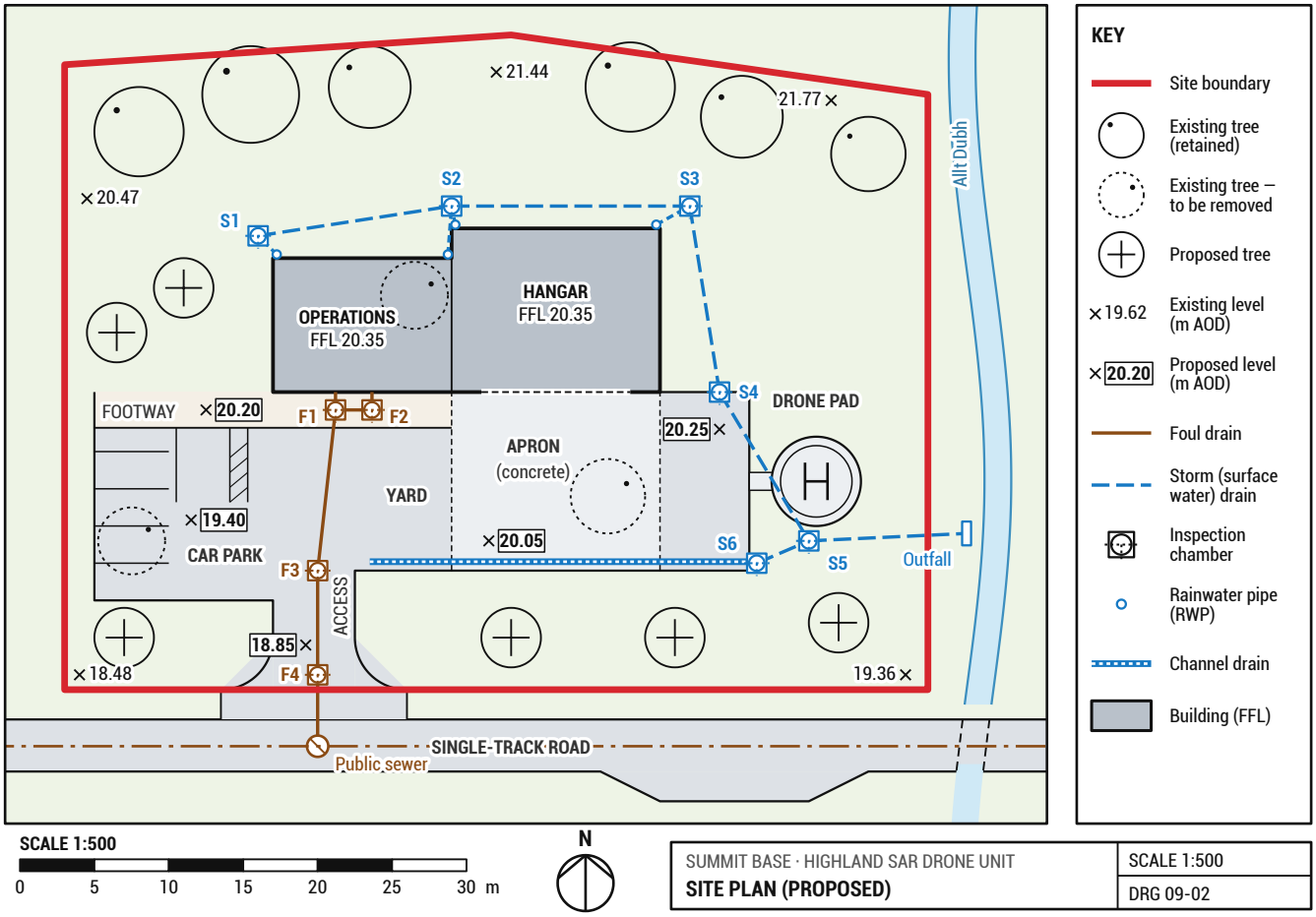

Fig 9.2 Proposed site plan of SUMMIT Base at 1:500 (A3 version at 1:200 in the pupil resource drawings).

01 **Boundary** in red; the building footprint drawn solid with its **FFL** (finished floor level).

02 **Access and parking**: entrance from the road, yard, apron, car park with an accessible bay.

03 **Levels** in m AOD: existing (plain) and proposed (boxed). Do not mix them up: FFL 20.35 is proposed.

04 **Trees**: existing, to be removed and proposed, using the BS symbols.

05 **Drainage runs**: foul (brown, solid) and storm (blue, dashed) to inspection chambers F1–F4 and S1–S6.

06 **North point, scale bar, key, title block.**

QUICK CHECK 9.2

1 Explain why Fig 9.2 still shows the three trees that are to be removed.

1

9.4 SURVEYS
TOPOGRAPHICAL SURVEY

A **topographical survey** is a measured drawing of the ground *as it is now*: its shape, its levels and its natural features. The site plan is designed on top of it.

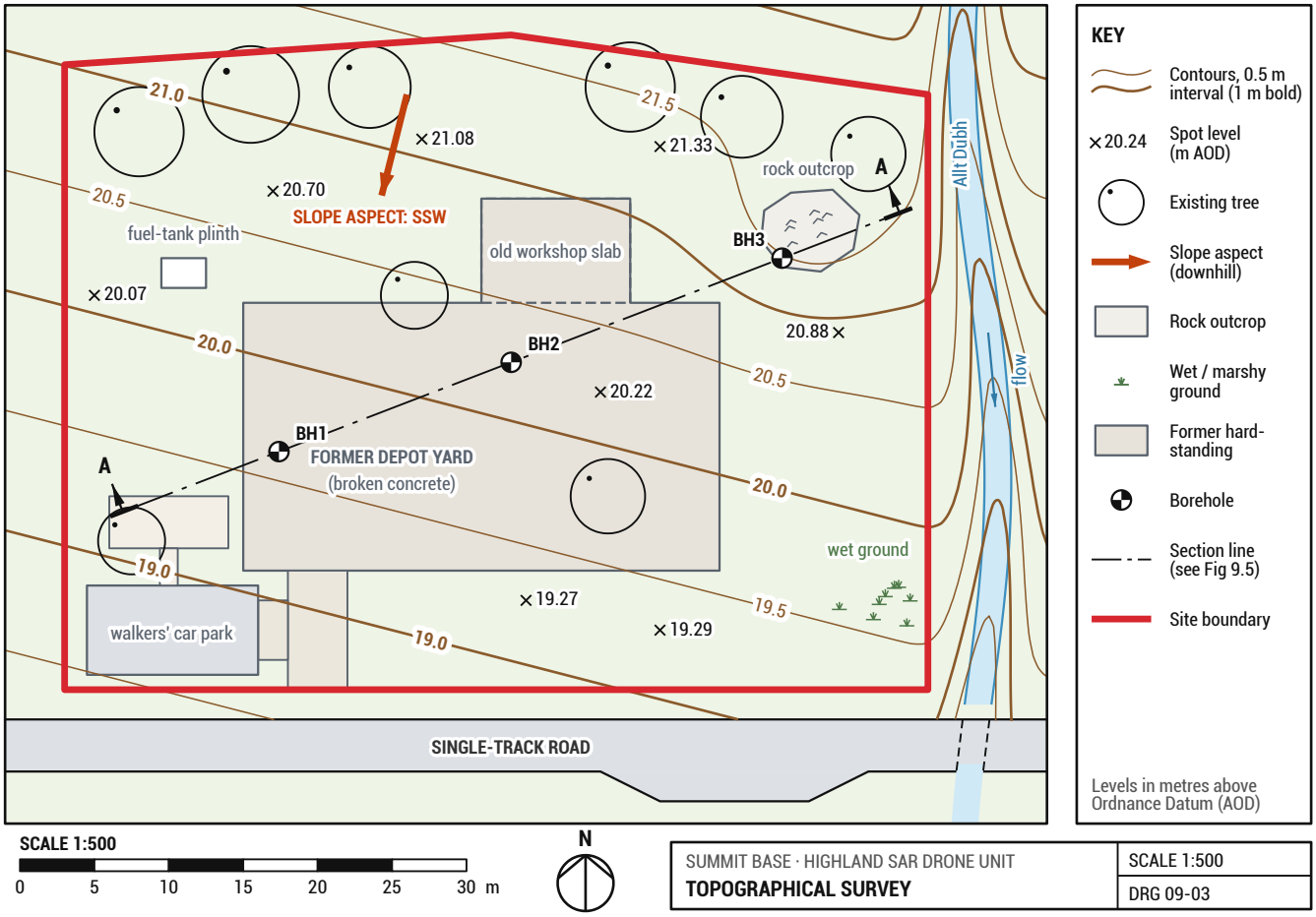

Fig 9.3 Topographical survey of the former depot at 1:500, with boreholes and section line A–A (used in 9.6).

WHAT IT RECORDS

- **Spot levels** on a grid and at changes of slope, in metres above **Ordnance Datum** (AOD).
- **Contours**: lines joining points of equal level (here every 0.5 m; 1 m bold).
- **Slope aspect**: the compass direction the slope faces, downhill.
- **Natural land features**: the burn, a rock outcrop, wet ground and every tree with its canopy spread.

WHY IT MATTERS AT SUMMIT BASE

- The ground falls about 2.5 m in 40 m (1 : 16) to the SSW, so the floor level (FFL 20.35) is set to balance **cut and fill**.
- Water runs downhill towards the road and the burn, so drains follow the fall.
- The trees and the burn are constraints that conservation bodies will check.

FIELD NOTE: HOW THE SURVEY IS MADE

Points are measured with a **total station** or **GNSS** (satellite) receiver, or by drone photogrammetry or laser scanning; CAD then interpolates the contours. Surveyors often supply a combined **topographical and feature survey** (9.7).

9.5 READING SURVEYS
LEVELS, CONTOURS & SLOPE ASPECT

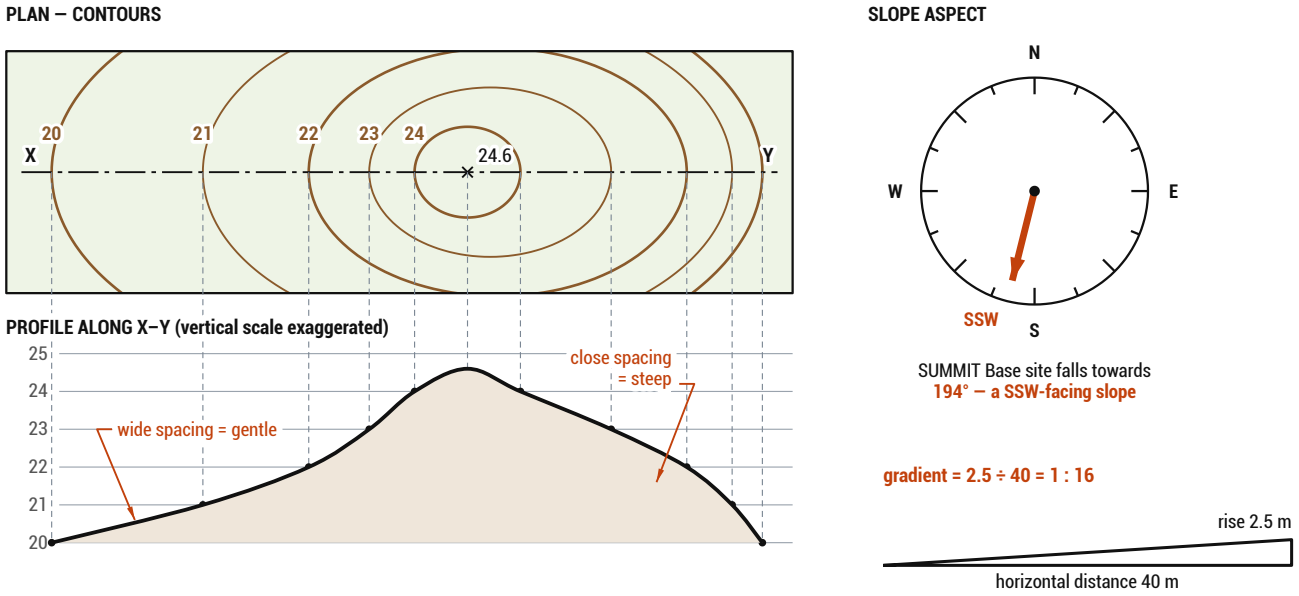

Fig 9.4 Projecting a profile from contours (left); slope aspect of the SUMMIT Base site (right).

READING CONTOURS

- **Close** contours = steep ground; **wide** spacing = gentle ground.
- Contours never cross; a closed loop is a hill (or a hollow).
- Where contours cross a stream they form a **V pointing upstream**: see the burn on Fig 9.3.
- **Slope aspect** is found at right angles to the contours, in the downhill direction.

GRADIENT

gradient = rise (or fall) ÷ horizontal distance, written **1 : n** or as a %.

KEY TERMS

AOD above Ordnance Datum (mean sea level at Newlyn) · **FFL** finished floor level · **CL** cover level · **IL** invert level, the lowest inside point of a pipe · chamber depth = CL − IL

WORKED EXAMPLE: THE GROUND

On Fig 9.3 the 20.0 and 20.5 contours are about **8 m** apart, measured at right angles with the scale bar.

gradient = 0.5 ÷ 8 = 1 ÷ 16 → **1 : 16** (6.25 %)

WORKED EXAMPLE: A DRAIN

Existing storm drain MH4 → MH5 (Fig 9.6): IL 19.62 → 19.47, length 15.3 m.

fall = 19.62 − 19.47 = 0.15 m
gradient = 0.15 ÷ 15.3 → 1 : (15.3 ÷ 0.15) = **1 : 102** (about 1 : 100)

QUICK CHECK 9.3

1 The existing foul drain falls from MH2 (IL 18.70) to MH3 (IL 18.05) over 9.1 m. Calculate its gradient as 1 : n.

2

9.6 SURVEYS
UNDERGROUND SURVEY

An **underground survey** shows what lies beneath the site: **previous land use**, **land composition** and the **depth of each substrate**.

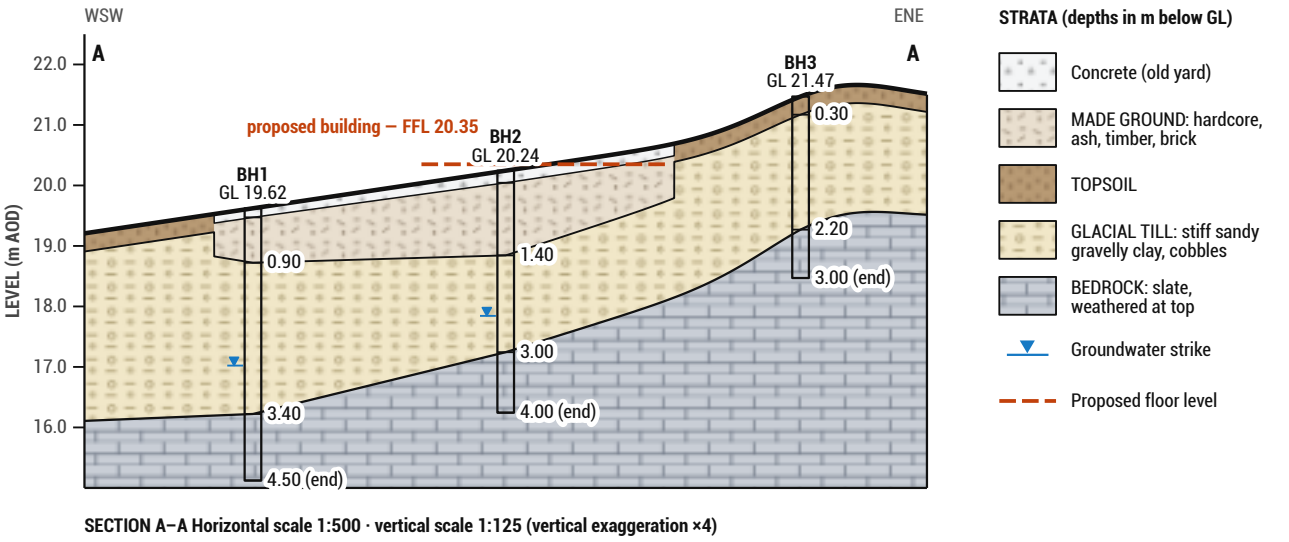

Fig 9.5 Section A–A through boreholes BH1–BH3 (positions on Fig 9.3). Fictional ground-investigation data.

PREVIOUS LAND USE

A desk study of old maps and records shows a **forestry depot**: concrete yard, workshop, fuel tank. Expect **made ground** (dumped hardcore, ash, timber), buried slabs and old drains, and possible **contamination** from fuel or timber preservatives.

LAND COMPOSITION AND DEPTH OF SUBSTRATE

Each borehole is logged layer by layer, with depths **below ground level**. Level = ground level - depth.

BH2 LOG – GL 20.24 (UNDER THE HANGAR)		
0.00–0.20	Concrete (old yard)	20.04
0.20–1.40	Made ground: hardcore, ash, brick, timber; slight fuel odour	18.84
1.40–3.00	Glacial till: stiff sandy gravelly clay with cobbles	17.24
3.00–4.00	Bedrock: slate, weathered at the top	16.24

Groundwater at 2.40 m. Last column: level of the base of each layer (m AOD).

WHAT THE ENGINEERS DO WITH IT

Foundations go through the variable made ground to the firm **glacial till**. Till drains poorly, so storm water goes to the burn, not a soakaway (9.7).

QUICK CHECK 9.4

1 Use Fig 9.5 to calculate the level, in m AOD, of the top of the bedrock at BH1. Show your working.

2

9.7 SURVEYS
DRAINAGE & FEATURE SURVEYS

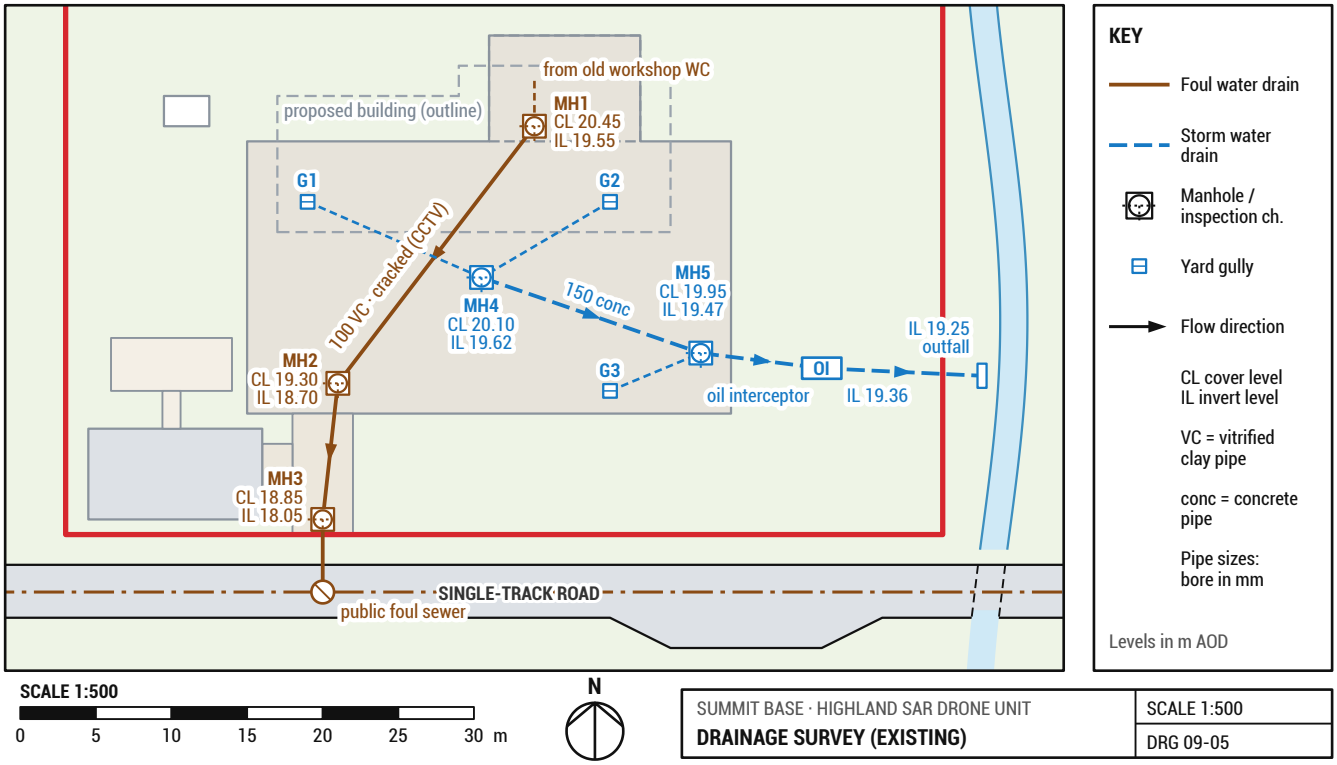

Fig 9.6 Drainage survey of the existing depot drains at 1:500 (fictional survey data).

A **drainage survey** records every manhole: cover and invert levels, pipe sizes and materials, flow direction and condition (often by CCTV). **Storm water** (roofs, yards) goes to the burn; **foul water** (WCs, basins, showers, sinks) goes to the public sewer, in a separate system.

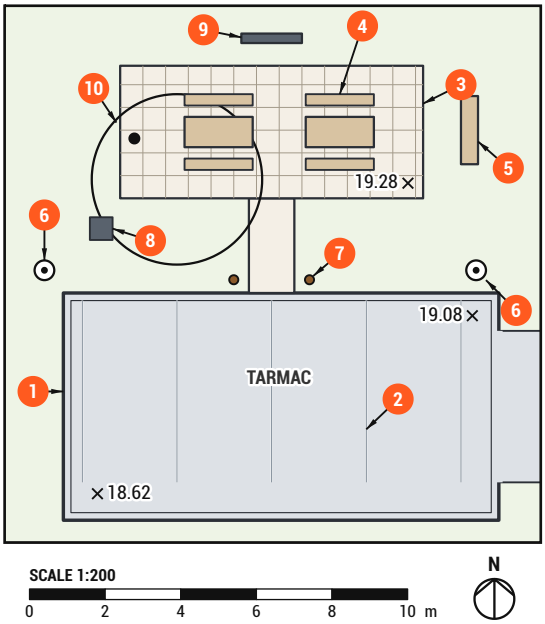

Fig 9.7 Feature survey extract, 1:200: the old walkers' car park.

A **feature survey** fixes the position of man-made features, especially **hard landscaping**, so designers can decide what to keep, reuse or remove.

1	Tarmac car park with precast concrete kerbs	**7**	Timber bollards
2	White-lined parking bays	**8**	Litter bin
3	Paving: 600 × 600 concrete flags	**9**	Information board
4	Seating: picnic tables	**10**	Existing tree
5	Seating: timber seat		
6	Lighting: lamp columns		

The landscape architect can reuse the flags and seating; the electrician checks whether the lamp columns can be reconnected.

9.8 PLANNING DRAWINGS
FLOOR PLANS & CAD LAYERS

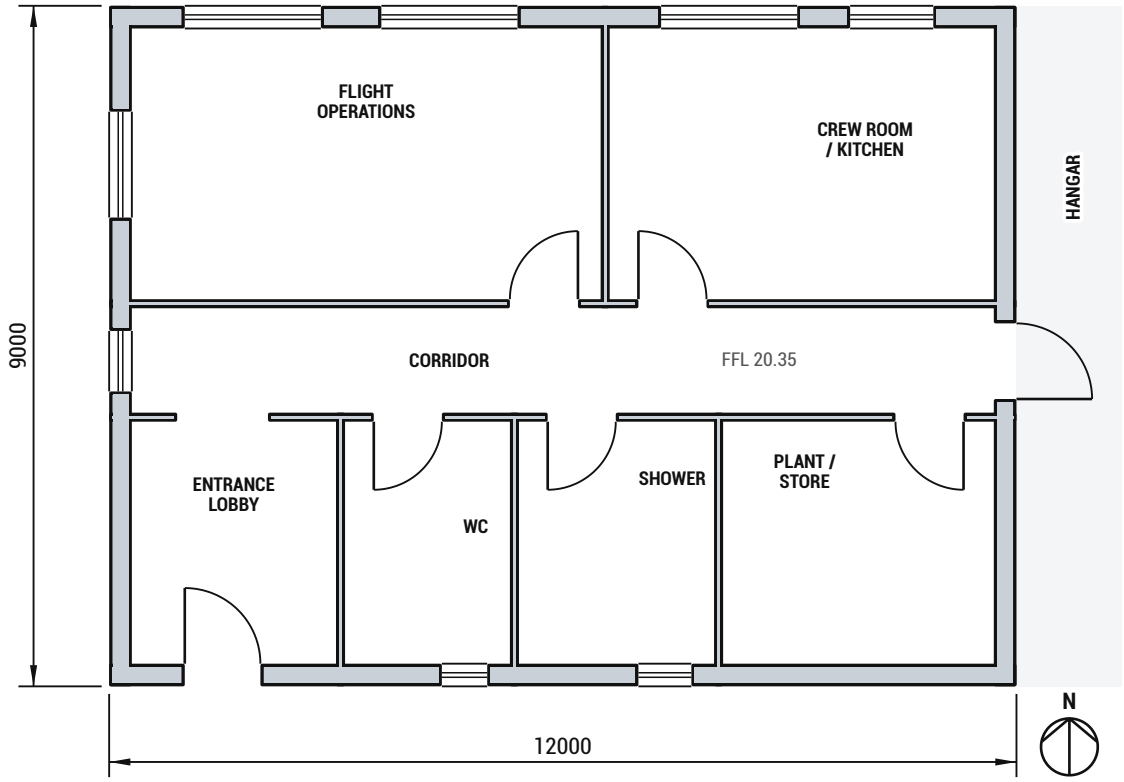

Fig 9.8 Operations wing floor plan (general arrangement) at 1:100. Dimensions in mm.

FLOOR PLAN CONVENTIONS

- A horizontal section ~1 m above the floor.
- Cut walls thick; windows thin lines.
- Doors open at 90° with a swing arc.
- Names, **mm** dimensions, FFL; **1:50** or **1:100**.

WHY CAD LAYERS?

Each kind of information sits on its own named **layer** (colour, line type, weight). Layers can be switched off or locked: each trade prints only its layer, a wall change updates every drawing, and overlays reveal clashes.

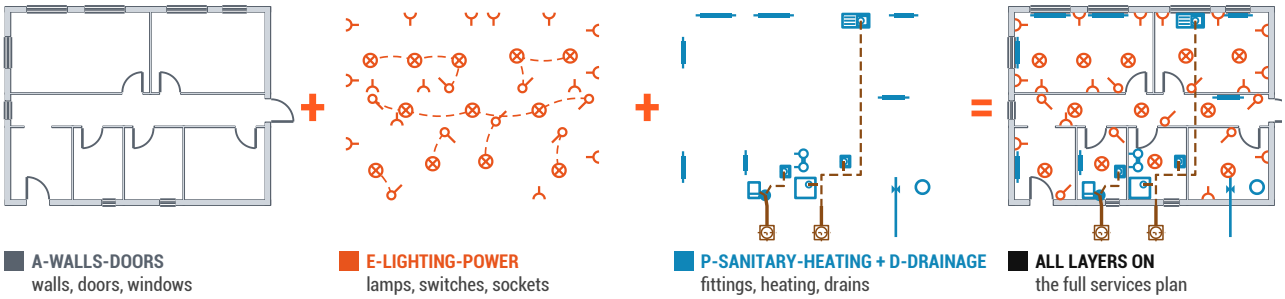

Fig 9.9 One plan, four layers (P and D shown together). Switch them all on for the full services plan.

DRAWING THE SYMBOLS CORRECTLY

Switch: circle on the inside wall face, one 45° lever, on the latch side clear of the door swing. **Socket**: semicircle with its ends on the wall face, stem into the room. **Sanitary fittings**: complete closed symbols set slightly in from the walls; waste circles small.

9.9 PLANNING DRAWINGS
ELECTRICAL, PLUMBING & SERVICES LAYERS

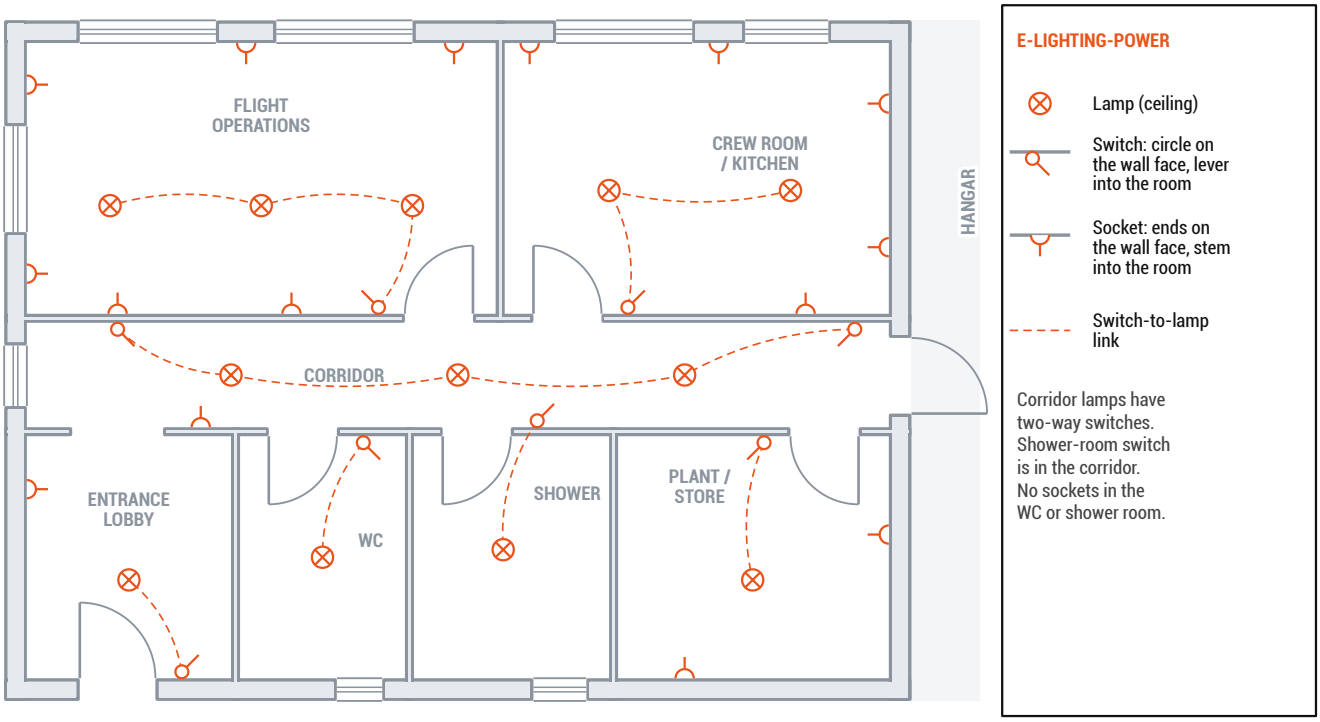

Fig 9.10 Electrical layer at 1:100 over the grey base plan.

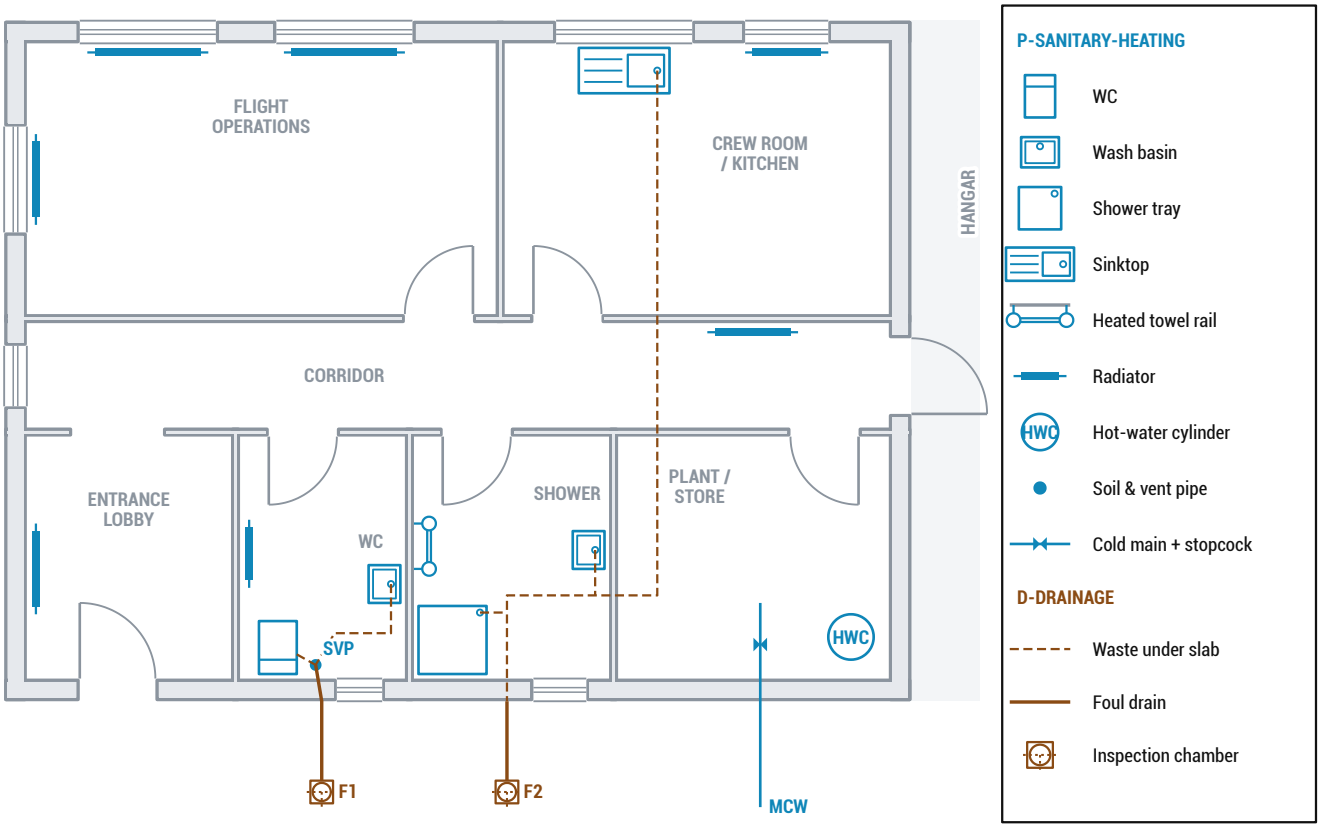

Fig 9.11 Plumbing and services layer at 1:100: fittings, heating, water supply and drains to F1 and F2.

MISSION TASK 9.5 **SUMMIT BASE DRAWING PACKAGE · 12 MARKS**

1 The landscape architect uses the topographical and feature surveys (Figs 9.3, 9.7).

(a) Explain **two** pieces of information the landscape architect would take from these surveys.

2

(b) State the slope aspect of the site and explain **one** benefit it gives the apron and drone pad.

2

2 The proposed foul drain runs from F1 (IL 19.20) to F3 (IL 18.55). The run is 10.9 m long.

(a) Calculate the gradient of the run as 1 : n.

2

(b) Explain why foul water and storm water are kept in separate systems.

2

3 Explain why the structural engineer needs the underground survey (Fig 9.5) before designing the hangar foundations.

2

4 Sketch the BS symbols for a **switch** and a **socket** on the wall beside the door, placed correctly for the door swing.



2

10

CHAPTER 10

EXAM TECHNIQUE & GLOSSARY

You now know the content. This chapter is about turning that knowledge into marks: reading command words, linking every point to the context, and using the exact technical vocabulary markers look for.

LEARNING INTENTIONS

- Recognise what each command word asks you to do
- Learn from the strengths and weaknesses reported by markers

SUCCESS CRITERIA

- I can write an answer that is specific to the product and audience in the question
- I can use technical terms precisely and define them when asked

10.1 COMMAND WORDS
ANSWER THE QUESTION THAT WAS ASKED

The question paper has 90 marks in 2 hours 30 minutes — roughly **1 minute 40 seconds per mark**. The command word tells you what kind of answer earns each mark.

COMMAND	WHAT YOU MUST DO	SUMMIT-X EXAMPLE OF A CREDITWORTHY POINT
QUESTION-PAPER COMMAND WORDS (2022–2026 PAPERS)		
State / name / identify	Give a fact, term or feature. No explanation needed.	"A removed section."
Describe	Give the characteristics or the stages of a process — *what* it is or *how* it is done — in enough detail to picture it.	"The profile is swept along a U-shaped path with R25 bends to form the skid."
Explain	Give a **reason** or a cause and its effect: the "because…, so…" link.	"The bore is toleranced H7 **because** the arm must locate without play, **so** the motor stays square to the arm."
Compare	Give similarities and/or differences that are **linked** — both sides of each point in the same sentence.	"FEA shows stress before anything is made, **whereas** a physical test destroys a real part but includes real-world defects."
Calculate	Work out a value from the data given; show your working and give the unit.	"Max clearance = largest hole - smallest shaft = 18.018 - 17.983 = 0.035 mm."
PROJECT AND DESIGNCLASS TASK WORDS — NOT QUESTION-PAPER COMMAND WORDS		
Justify	Give reasons that **support a choice** that has been made, tied to the product and the audience.	"STEP suits the machinist because it keeps exact B-rep geometry, so their CAM software can machine true arcs."
Evaluate	Make a judgement of effectiveness using evidence: strengths **and** weaknesses, and a conclusion.	"The guard CFD is useful for comparing designs, but at a reduced Reynolds number, so a wind-tunnel check is still needed."
Suggest	Propose a sensible improvement or reason, applying knowledge to a new situation.	"Shell the solid arm to a 2 mm wall to save mass and increase flight time."

EXAM INTEL **FIVE HABITS THAT SCORE**

1. **Name the context** — the part, the audience, the drawing — in every point.
2. Give **one point per mark**; a 3-mark question needs three distinct points.
3. Use the **spec term**: "nodes", "faces", "functional tolerance", "datum".
4. For advantages *and* disadvantages, give both — markers report second points are often missing.
5. Explain **function and purpose**, not just numbers or appearance.

COMMON ERROR

Rehearsed, generic answers. "STL is a small file" or "CAD is quicker" will rarely gain a mark at this level. Say *which* file, *for whom*, and *what difference it makes*.

Rewording the question is not an answer: "Screen printing is chosen because it is suitable" restates the question.

10.2 LEARNING FROM THE MARKERS
WHAT THE 2026 COURSE REPORT SAYS

Each year Qualifications Scotland publishes a course report on how candidates performed. These points from the **2026** Advanced Higher report (2025 where marked) relate directly to this booklet's chapters.

DONE WELL

- 3D modelling, including freeform modelling CH 05
- FEA set-up and digital testing methods CH 06
- Describing VRML features such as 360° viewing CH 08
- Underground and drainage surveys; the interior designer's role CH 09
- Roles of engineers (2025) CH 01
- In the project, technical graphic solutions with good models, assembly drawings, FEA and renders

FOUND DIFFICULT

- **Surface modelling** — loft confused with shelling instead of thickening CH 05
- **Polygon modelling** — few gained the mark for editing nodes, edges, faces or mesh density CH 05
- **CFD** — most answers in context were poor CH 06
- **CAD/CAM** and 3D modelling techniques — answers lacked depth CH 05 · 07
- **File types** — format named but its function not explained, e.g. for vinyl cutting CH 07 · 08
- **Surveys** — feature survey confused with topographical survey CH 09
- **Roles** of town planners and conservation bodies — generic answers CH 09
- **Tolerances** (2025) — numbers compared instead of their functions CH 04

WORKED EXAMPLE: LIFT A 1-MARK ANSWER TO FULL MARKS

QUESTION 3 MARKS

The SUMMIT-X canopy is a thin, smooth shell. Explain why a designer might build it with **surface modelling** rather than modelling a solid and shelling it.

WEAK ANSWER — 1 MARK

"Surface modelling makes smooth shapes and is easier. It is better for curved parts like the canopy."

Why: one creditworthy idea (control of smooth curved form). "Easier" and "better" are unsupported.

STRONG ANSWER — 3 MARKS

"Each surface is built directly from the canopy's section curves and rails, so the designer controls the outer form and its continuity exactly **(1)**. Patches can be edited or replaced one at a time and then stitched into a watertight body, so changing the nose does not rebuild the whole part **(1)**. Openings such as a camera window can be trimmed accurately into the curved skin before it is thickened to the 2 mm wall, which is hard to control on a solid **(1)**."

SOURCE

Qualifications Scotland / SQA, *Course reports 2026 and 2025: Advanced Higher Graphic Communication* (paraphrased). Find past papers, marking instructions and course reports on the Qualifications Scotland website.

KEY VOCABULARY

10.3 GLOSSARY · A–L

- **Adaptive clearing**
  CNC roughing toolpath that keeps the tool's engagement constant so material is removed quickly without overloading the cutter.
- **Assembly drawing**
  Shows how components fit together, usually with balloons and a parts list.
- **Auxiliary view**
  A view projected onto a plane parallel to an inclined surface so that surface appears true shape.
- **Boolean**
  Combining bodies by add (union), subtract (difference), intersect or slice.
- **Bottom-up modelling**
  Parts are modelled separately, then brought into an assembly and positioned with joints/constraints.
- **BS 8888**
  The British Standard for technical product documentation and specification.
- **Centre of mass**
  The point at which the whole mass of a part or assembly can be considered to act.
- **CFD**
  Computational fluid dynamics: simulating how liquids and gases flow around or through a product.
- **Chamfer**
  An angled edge break, e.g. 1 × 45°.
- **Constraint (FEA)**
  A fixing point that stops a part moving in a simulation.
- **Contour (survey)**
  A line joining points of equal height above a datum.
- **Cut-away**
  A pictorial view with part of the outside removed to show internal detail.
- **Cutting plane**
  Thin chain line, thick at the ends and changes of direction, with arrows and letters showing where a section is taken and the direction of viewing.
- **Datum**
  A reference feature (face, edge, axis or point) from which other features are dimensioned, measured or machined.
- **Drainage survey**
  Records the existing storm-water and foul-water drains, chambers, levels and outfalls.
- **DWG**
  AutoCAD's native drawing file format for 2D and 3D CAD data.
- **DXF**
  Vector exchange format widely used to send 2D profiles to laser cutters and other CAD software.
- **Factor of safety**
  Material strength ÷ maximum stress; above 1 means the part should not fail.
- **FEA**
  Finite element analysis: dividing a model into a mesh of small elements to predict stress, strain and displacement under load.
- **Feature survey**
  Records surface features such as paving, seating, lighting and boundaries.
- **Fillet**
  A rounded edge of constant radius (regular) or changing radius (irregular or variable).
- **Freeform (morph) modelling**
  Shaping a polygon/T-spline body by moving its nodes (vertices), edges and faces, often with symmetry, then converting to a solid.
- **Functional dimension (F)**
  A dimension essential to how a part works or fits.
- **Hatching**
  Thin, evenly spaced lines, usually at 45°, showing where a section cuts solid material.
- **IGES**
  An older neutral exchange format; widely read, but often transfers surfaces rather than clean solids.
- **Kerf**
  The width of material removed by a laser or cutting tool.
- **Layer (CAD)**
  A named group of drawing data that can be shown, hidden or styled separately, e.g. electrical or plumbing.
- **Location plan**
  Small-scale plan (typically 1:1250 or 1:2500) showing a site in its surroundings, edged red.
- **Loft**
  A solid or surface blended through two or more profiles; **rails** guide the shape between them.

10.3 KEY VOCABULARY GLOSSARY · M–Z

- **Mechanical animation**
  An animation showing how a product moves, operates or is assembled, driven by joints and motion links.
- **Mesh (FEA)**
  The network of elements and nodes a model is divided into; a finer mesh gives more accurate results but takes longer.
- **Nesting**
  Arranging parts on a sheet to use as much material as possible.
- **Non-functional dimension (NF)**
  A dimension not essential to the function of a part.
- **Part section**
  A small, local section bounded by a thin irregular break line.
- **PCD**
  Pitch circle diameter: the diameter of the circle on which a pattern of holes is centred.
- **Ra**
  Arithmetical mean deviation of a surface profile, in micrometres; the lower the value, the smoother the surface.
- **Removed section**
  A section drawn away from the view, labelled from its cutting plane.
- **Revolved section**
  A cross-section rotated 90° and drawn on the view itself.
- **Site plan**
  Larger-scale plan (typically 1:200 or 1:500) showing boundaries, buildings, access, levels and drainage on a site.
- **Slope aspect**
  The compass direction a slope faces.
- **STEP**
  ISO 10303 neutral format that carries exact solid (B-rep) geometry between different CAD/CAM systems.
- **Stepped section**
  A section whose cutting plane changes direction to pass through features not in one plane; drawn as if on one plane.
- **Stitch / knit**
  Joining separate surfaces along shared edges into one surface body or, if closed, a solid.
- **STL**
  A mesh of triangles approximating a surface; the standard input for 3D-print slicers. No units, colour or exact curves.
- **Surface modelling**
  Building zero-thickness surfaces (patch/boundary, loft, sweep), then trimming, stitching and thickening them.
- **Surface texture symbol**
  BS EN ISO symbol showing whether material removal is required, permitted or not permitted, with Ra and process notes.
- **Sweep**
  Extruding a profile along a path.
- **Third-angle projection**
  The projection used in Qualifications Scotland papers (BS 8888 also allows first angle): the plan is drawn above the front elevation and the end view on the side it is viewed from.
- **Tolerance**
  The permitted variation in a size, shown as limits, symmetrical (±) or asymmetrical deviations.
- **Toolpath**
  The route a CNC cutter follows, generated by CAM software from the 3D model.
- **Top-down modelling**
  Designing parts in the context of the assembly so their geometry is driven by, and updates with, the parts around them.
- **Topographical survey**
  Records the shape of the land: contours, spot levels, slope aspect and natural features.
- **Trim**
  Cutting a surface back to where it meets another surface or curve.
- **Underground survey**
  Investigates what lies below ground: previous land use, soil and rock layers, and depth to firm substrate.
- **Variable (irregular) fillet**
  A fillet whose radius changes along the edge, e.g. R2 rising to R5 on the SUMMIT-X motor mount.
- **von Mises stress**
  A single combined stress value used in FEA to compare against a ductile material's yield strength.
- **VRML (.wrl)**
  Virtual reality modelling language: a text-based format for interactive 3D scenes that can be viewed and rotated on screen.
- **3DS**
  3D Studio mesh format that stores geometry with materials, textures, lights and cameras for visualisation.

designclass
design | engineering | technology

CAD & ENGINEERING GRAPHICS

ADVANCED HIGHER GRAPHIC COMMUNICATION · PROJECT 01

Free resources for Scottish pupils and teachers of design, engineering and technology. Lessons, videos, CAD files and teacher packs at **designclass.co.uk**.

Course content referenced from the Qualifications Scotland Advanced Higher Graphic Communication Course Specification (v4.0, September 2026) and the 2026 Advanced Higher Graphic Communication course report.

SUMMIT-X, the Highland Search & Rescue Drone Unit and SUMMIT Base are fictional. All models, renders, drawings and graphics © DesignClass 2026.