WORKSHEET 01 · CAD & ENGINEERING GRAPHICS

CREATORS, USERS & GRAPHIC TYPES

Who makes each technical graphic, who reads it and what they need from it — applied to the SUMMIT-X rescue drone.

01

COURSE NOTES **CH 01** TIME **45 MIN** TOTAL **25 MARKS** EDITION **TYPE-IN**

NAME _____ CLASS _____ DATE _____

LEARN IT THE ESSENTIALS

CREATORS AND USERS

The **creator** produces a graphic; the **user** reads it to make, check, approve or explain something. A graphic has done its job when its user can act on it without asking a question.

HOW TO ANSWER

Name the **specific information** and say **why that user needs it**: "the machinist needs the Ø18 H7 bore limits so the arm is a close fit", not "needs to know what to make".

THREE GRAPHIC TYPES

- **Preliminary**: sketches and quick models to explore and share ideas (design team; client at concept reviews).
- **Production**: complete, accurate drawings to standards, plus CAM files (engineers, machinists, fabricators).
- **Promotional**: renders, animations and AR with impact and a clear message (client, funders, public).

MANUAL, DIGITAL AND BOTH

Sketch → scan, smart pen or visualiser → trace in CAD → model → annotate the render by hand.

MISSION BRIEF The Highland Search & Rescue Drone Unit (HSRDU) has approved the SUMMIT-X concept. Iain, the team leader, must win support from volunteers and funders. Morven, a CNC machinist in Aberdeen, will make the motor mounts. Three graphics produced so far are shown below.

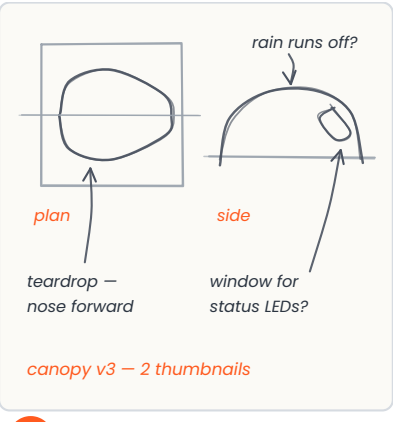

A

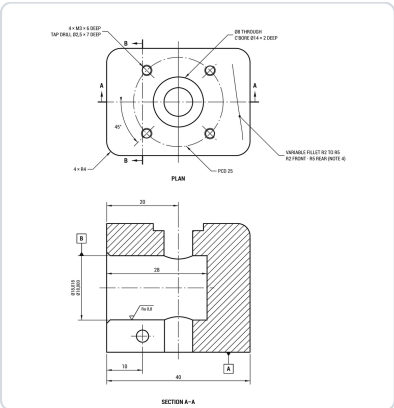

B



C

Fig 1 Graphics A, B and C produced for SUMMIT-X (B is part of the A3 motor-mount drawing SX-02-003).

1 **(a)** State the graphic type of each of graphics A, B and C.

A _____ B _____ C _____

3

(b) Explain, giving **two** reasons, why graphic B would not be suitable for the HSRDU's fundraising leaflet.

2

(c) Describe **two** ways that graphic A helps the design team when they discuss canopy ideas with Iain at a concept review.

2

2 The SUMMIT-X graphics are used by people with different roles. For each person below, describe **one** specific item of information they need from the technical graphics and explain why they need it.

(i) Manufacturing engineer planning how the motor mount is made

2

(ii) Electronic and electrical engineer

2

(iii) Model-maker producing a test prop guard

2

(iv) End user — a volunteer pilot in the HSRDU

2

3 Ailsa, a designer, has sketched canopy ideas on paper and now wants to develop them as a 3D CAD model. Describe **two** techniques she could use to combine her manual sketches with digital graphics, and explain a benefit of each.

4

4 Explain why the CAD technician who builds the SUMMIT-X model needs the team's dimensioned sketches **and** the company's agreed layer and file-naming protocol.

2

5 Iain wants volunteers to be able to replace a damaged arm on the hillside, using a graphic on a mobile phone. State a suitable graphic type **and** a technique for this graphic, and explain your choice with reference to the volunteers and the conditions they work in.

4

EXAM INTEL

The question paper rewards answers that are **linked to the context**. Check every answer on this sheet: does it name SUMMIT-X, the part or the person?

designclass design | engineering | technology © DesignClass 2026 · designclass.co.uk · Free for use in Scottish schools

TOTAL 25 MARKS