WORKSHEET 02 · CAD & ENGINEERING GRAPHICS

DRAWING STANDARDS & DIMENSIONING

Read, check and dimension SUMMIT-X drawings to BS 8888, then hunt down a junior technician's errors.

02

COURSE NOTES **CH 02** TIME **50 MIN** TOTAL **27 MARKS** EDITION **PRINT**

NAME _____ CLASS _____ DATE _____

LEARN IT THE ESSENTIALS

PROJECTION AND LINES

- **Third angle**: plan **above** the front elevation; view from the left drawn on the left.
- Thick continuous: visible outlines. Thin continuous: projection, extension, dimension and leader lines, hatching. Thin dashed: hidden detail. Thin long-dash dot: centre lines and cutting planes (cutting planes thick at the ends).

DIMENSIONING RULES

- mm only, stated once. Each size given once — no closed chains.
- Extension lines start with a small gap from a real edge. Dimension to a centre only where a centre line is drawn.
- First dimension ~10 mm from the outline, then ~6 mm apart; text centred, clear of all lines.
- Ø diameter · R radius · PCD pitch circle · AF/AC across flats/corners · ☐ square.

MISSION BRIEF The SUMMIT-X canopy is lofted through three elliptical sections with three rails, shelled to a 2 mm wall and SLS printed in PA12.

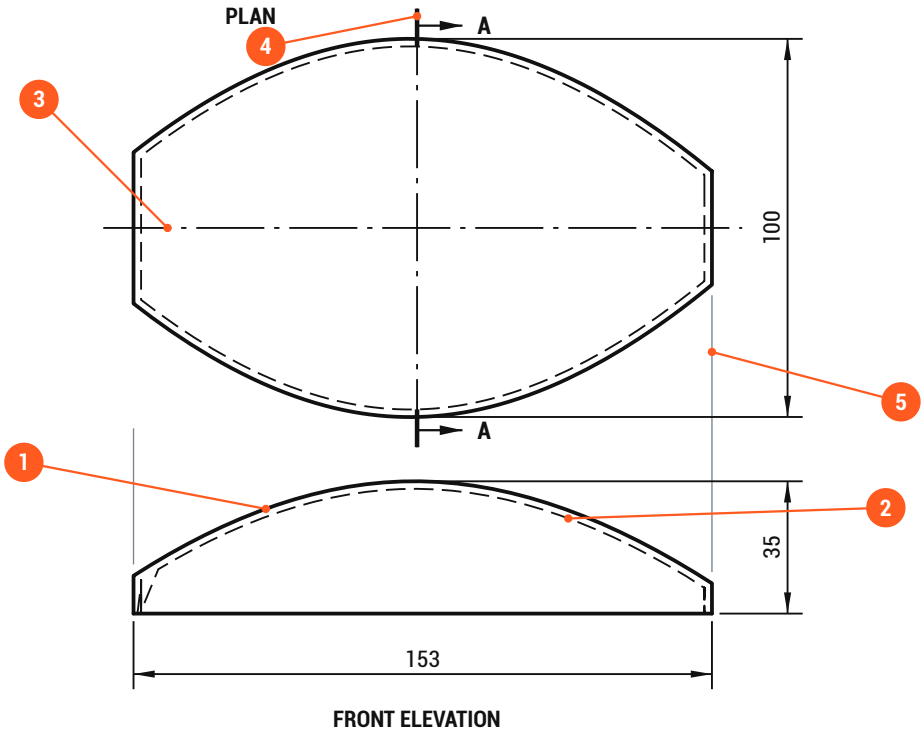

Fig 1 SUMMIT-X canopy, scale 1:2. Lines tagged 1–5.

1 **(a)** Name the type of line tagged 1 to 5 in Fig 1 and state what each shows on the canopy drawing.

TAG	LINE TYPE	WHAT IT SHOWS ON THE CANOPY
1		
2		
3		
4		
5		

5

(b) The drawing uses third-angle projection. State the evidence for this in the layout of Fig 1, and where the plan would be placed in first-angle projection.

2

2 Fig 2 is a junior technician's drawing of the frame plate. It contains **eight** errors against BS 8888.

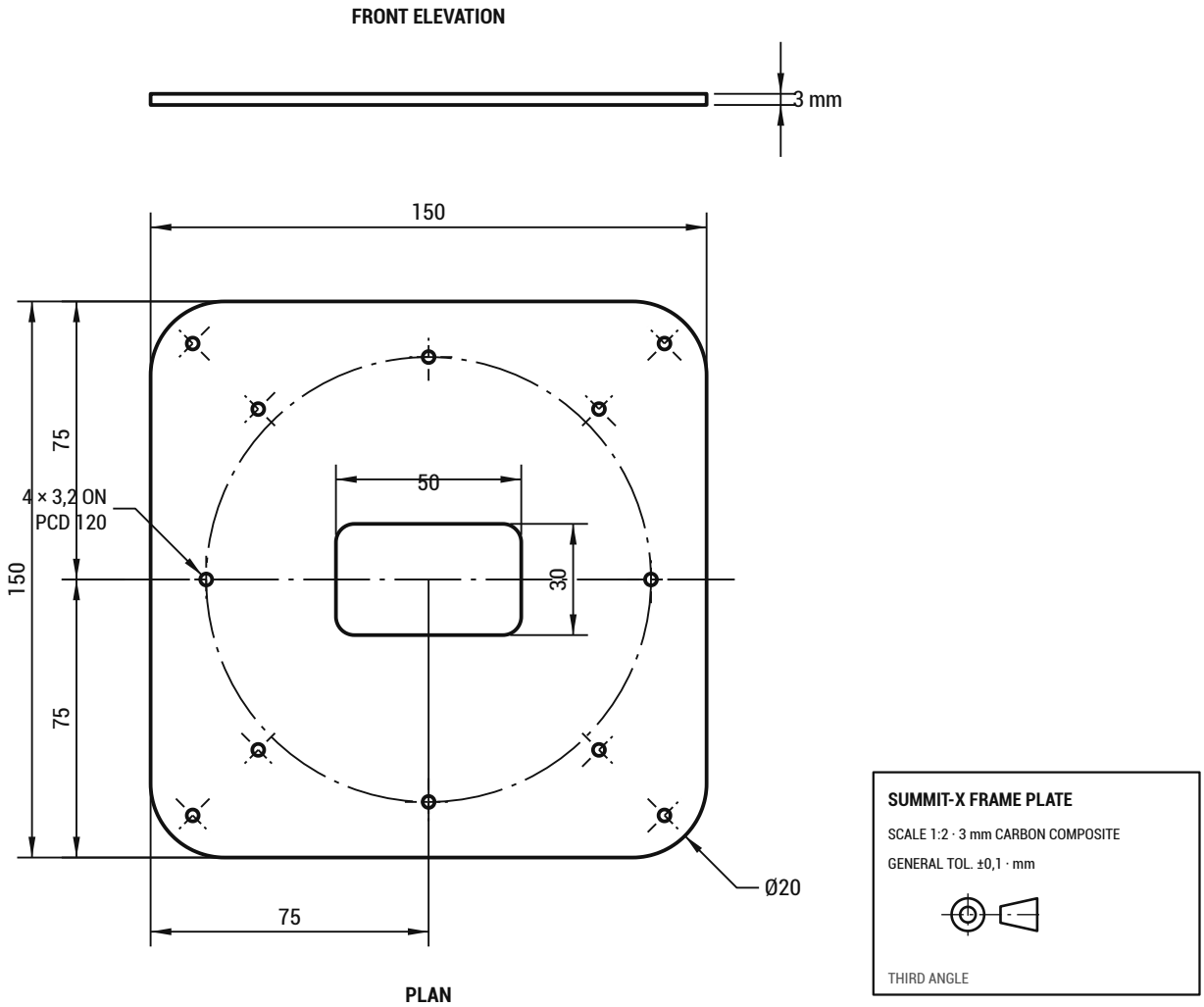

Fig 2 Frame plate drawing with eight errors (scale 1:2).

Describe **six** of the errors and state how each should be corrected.

6

3 A tidy drawing of the same plate is shown in Fig 3. Add the following dimensions to Fig 3 to BS 8888: (i) the two overall sizes; (ii) the corner radius; (iii) the four standoff holes, using a pitch circle diameter and a hole note; (iv) the width and height of the cable slot. Sizes: plate 150 square, R20 corners, holes Ø3.2, PCD 120, slot 50 × 30 with R5 corners.

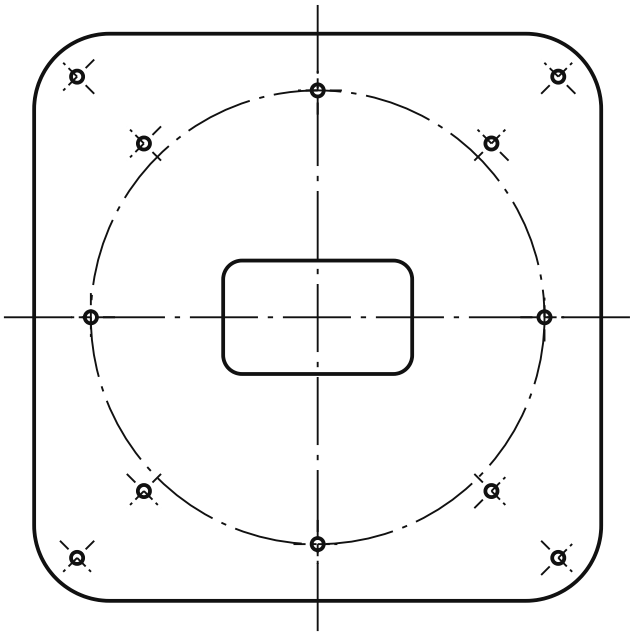

FRAME PLATE · PLAN · SCALE 1:2 (dimension this view)

Fig 3 Frame plate plan, scale 1:2.

5

4 On the plate, the arm-bolt holes lie at 65 mm and 90 mm from the centre on each 45° line. Every size carries the general tolerance of ±0,1.

(a) The outer hole is dimensioned as a **chain**: 65 from the centre, then 25 to the outer hole. Calculate the maximum and minimum distance of the outer hole from the centre. Show your working.

2

(b) State the maximum and minimum distance if the outer hole is dimensioned in **parallel** as 90 from the centre.

1

(c) Explain why parallel dimensioning from the centre datum is preferred for these holes.

2

5 The motor-mount drawing is at 2:1. The SUMMIT Base floor plan is at 1:50. Describe **two** differences in how scale and measurement are displayed on the two drawings.

2

6 Fig 4 shows three ways of drawing one of the motor mount's M3 tapped holes in section.

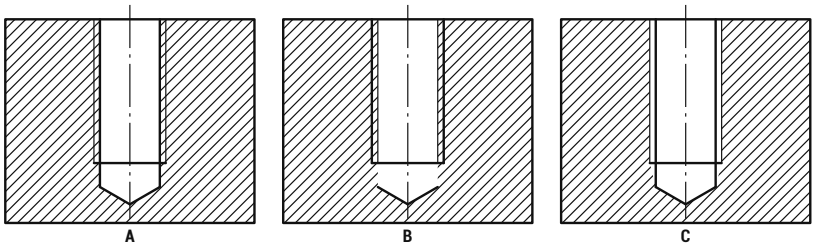

Fig 4 Blind M3 tapped hole (tapping drill Ø2.5 × 7 deep, thread 6 deep), section, enlarged.

(a) Tick (✓) the box for the drawing that follows the BS convention for an internal thread.

☐ A ☐ B ☐ C

1

(b) Explain why the minor diameter of an internal thread is drawn with a thick line.

1

designclass design | engineering | technology © DesignClass 2026 · designclass.co.uk · Free for use in Scottish schools

TOTAL 27 MARKS