WORKSHEET 03 · CAD & ENGINEERING GRAPHICS

SECTIONAL VIEWS & HATCHING

Name, explain and draw the six types of section and the cut-away, then find the hatching errors in an assembly section.

03

COURSE NOTES **CH 03** TIME **50 MIN** TOTAL **25 MARKS** EDITION **TYPE-IN**

NAME _____ CLASS _____ DATE _____

LEARN IT THE ESSENTIALS

SIX SECTIONS AND A CUT-AWAY

- **Full**: plane right through the part. **Half**: symmetrical part, one half cut, one half outside view, divided by a centre line.
- **Part**: a local area broken out (thin freehand break line). **Removed**: cross-section drawn away from the view, thick outline, labelled.
- **Revolved**: cross-section turned 90° and drawn on the view, thin outline, no label. **Stepped**: parallel planes joined by steps, no line at a step.
- **Cut-away**: a pictorial with part of the outside removed to show the inside.

HATCHING RULES

- Thin lines, usually 45°, evenly spaced; the same part is hatched the same way in every view.
- Adjacent parts: opposite directions (or a different spacing for a third part).
- Holes, slots and spaces are never hatched. Thin sections may be filled solid.
- Not hatched when cut lengthways: bolts, nuts, screws, washers, shafts, pins, keys, ribs, webs and spokes.
- No hidden detail in a section; draw visible edges beyond the plane.

MISSION BRIEF Six SUMMIT-X drawings are shown in Fig 1. Each uses a different type of sectional view.

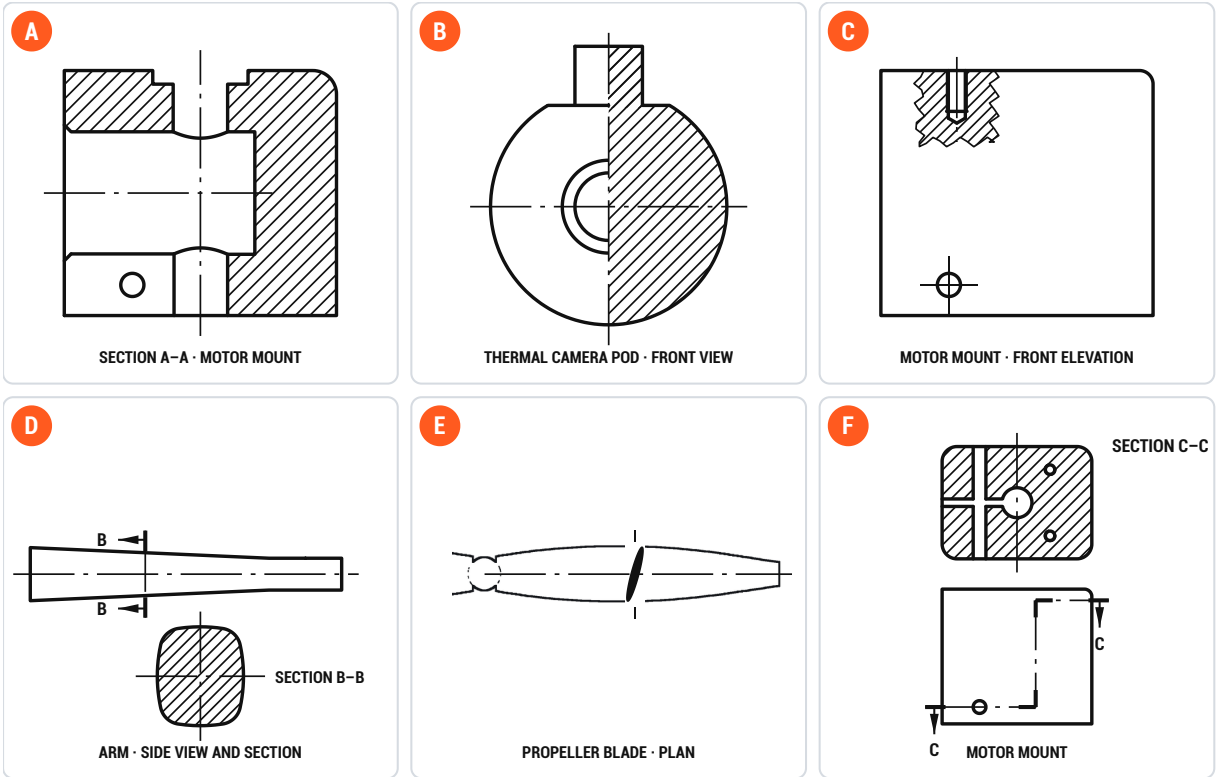

Fig 1 Sectional views A–F on SUMMIT-X parts (not all to the same scale).

1 Name the type of sectional view used in each of drawings A to F in Fig 1.

A **D**

B **E**

C **F**

6

2 Fig 2 shows the plan of a prop guard (scale 1:4). The guard is a ring, Ø270 inside with a 3 mm wall and 30 mm high, and two struts 8 wide × 6 deep. The bottom of the struts is 4 mm below the bottom of the ring. Sketch **SECTION A–A** at scale 1:2 in the grid. Apply the hatching conventions. Dimensions are not required.

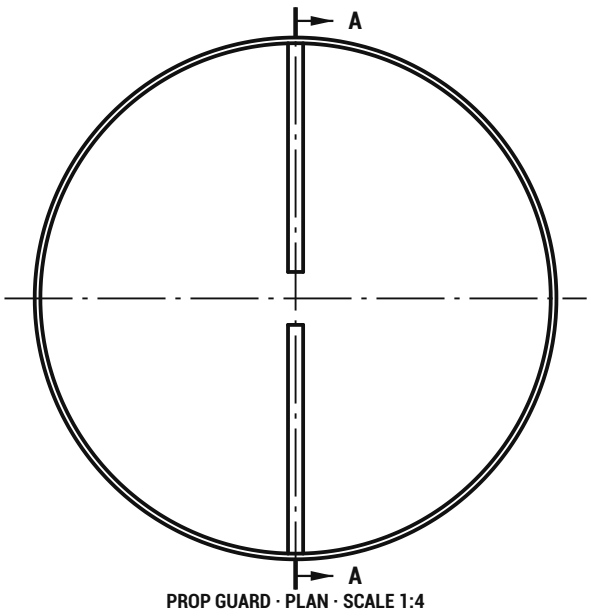

Fig 2 Prop guard, plan (scale 1:4).

5

3 A trainee has drawn the section through the arm clamp in Fig 3: the CFRP arm in the mount's bore, with the M3 pinch bolt and nut. The drawing contains **four** errors.

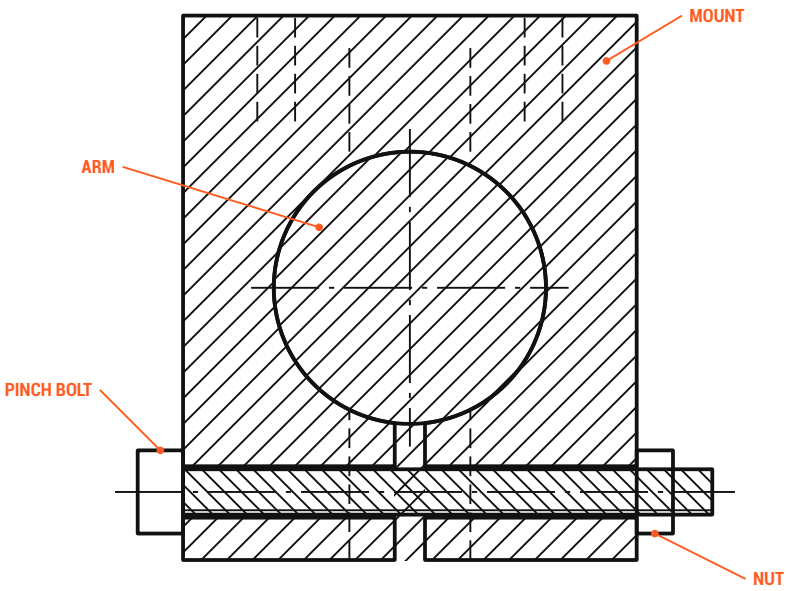

Fig 3 Trainee's SECTION B–B of the arm clamp assembly.

Describe each error and state the correction.

4

4 Explain each choice of view below. Refer to the part and to the needs of the reader.

(a) A half section is used for the thermal camera pod (drawing B).

2

(b) A revolved section, rather than a removed section, is used for the propeller blade (drawing E).

2

(c) A stepped section, rather than two separate full sections, is used to show the pinch-bolt hole and the tapped holes of the mount (drawing F).

2

5 The HSRDU maintenance manual shows the motor mount as the cut-away pictorial in Fig 4.

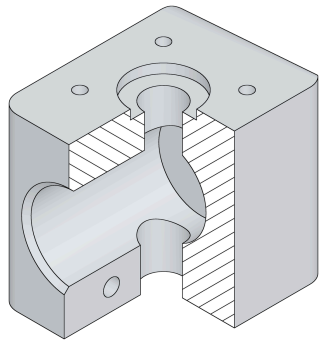

Fig 4 Cut-away pictorial of the motor mount (rendered from the SUMMIT-X model).

Explain **two** reasons why a cut-away pictorial suits the volunteers who maintain SUMMIT-X better than SECTION A–A (drawing A).

2

6 The canopy wall is only 2 mm thick. On an A3 drawing of the canopy at 1:2 it is cut by a section plane. Explain how the cut wall should be shown, and why.

2

EXAM INTEL **EXPLAIN YOUR CHOICE OF SECTION**

An explain answer links the choice to a **feature of the part** and to the **needs of the reader**: "A half section suits the pod because it is symmetrical about its axis, so one view shows the lens boss outside and the solid form inside — the supplier reads both without a second view."

designclass design | engineering | technology © DesignClass 2026 · designclass.co.uk · Free for use in Scottish schools

TOTAL 25 MARKS