WORKSHEET 05 · CAD & ENGINEERING GRAPHICS

ADVANCED 3D CAD MODELLING

Describe lofts with rails, sweeps, shells, Booleans, edge features, morphing, surfaces and top-down modelling — using the generic terms that gain marks.

05

COURSE NOTES **CH 05** TIME **55 MIN** TOTAL **34 MARKS** EDITION **PRINT**

NAME _____ CLASS _____ DATE _____

LEARN IT THE ESSENTIALS

SOLID TECHNIQUES

- **Loft with rails**: profiles on offset planes blended into one form; rails (guide curves) set the outline between them.
- **Sweep**: one profile follows a path and keeps its shape. **Shell**: hollows a solid to a wall thickness, removing chosen faces.
- **Fillet / chamfer**: regular (same size) or irregular — a **variable fillet** needs a radius at each end of the edge.
- **Booleans**: add (union), subtract (order matters), intersect, slice (split into two bodies).

FREEFORM, SURFACES, ASSEMBLIES

- **Morph**: push and pull the nodes, edges and faces of a polygon cage; symmetry mirrors edits; convert to a solid at the end.
- **Surfaces** have no thickness: loft/boundary, patch, trim, then stitch into a watertight solid or thicken.
- **Top-down**: parts are modelled in context, referencing the parts around them, so a change updates every linked part.
- Name the planes, profiles, sizes and the feature. Marks go for generic terms, not button names.

MISSION BRIEF The HSRDU wants a searchlight under SUMMIT-X for night searches. You are modelling the searchlight and its hand controller in 3D CAD.

1 State the most suitable 3D CAD technique for each searchlight feature below.

(i) A carry handle that keeps the same Ø8 section along a curved path _____

(ii) A soft, organic thumb grip that fits a gloved hand _____

(iii) A rounded edge that grows from R2 at one end to R6 at the other _____

(iv) Closing a gap in a damaged canopy surface imported as an IGES file _____ **4**

2 The searchlight's LED module is bought in, and the supplier provides it as a STEP file. Explain why it is inserted into the assembly bottom-up rather than modelled top-down.

_____

_____

_____ **2**

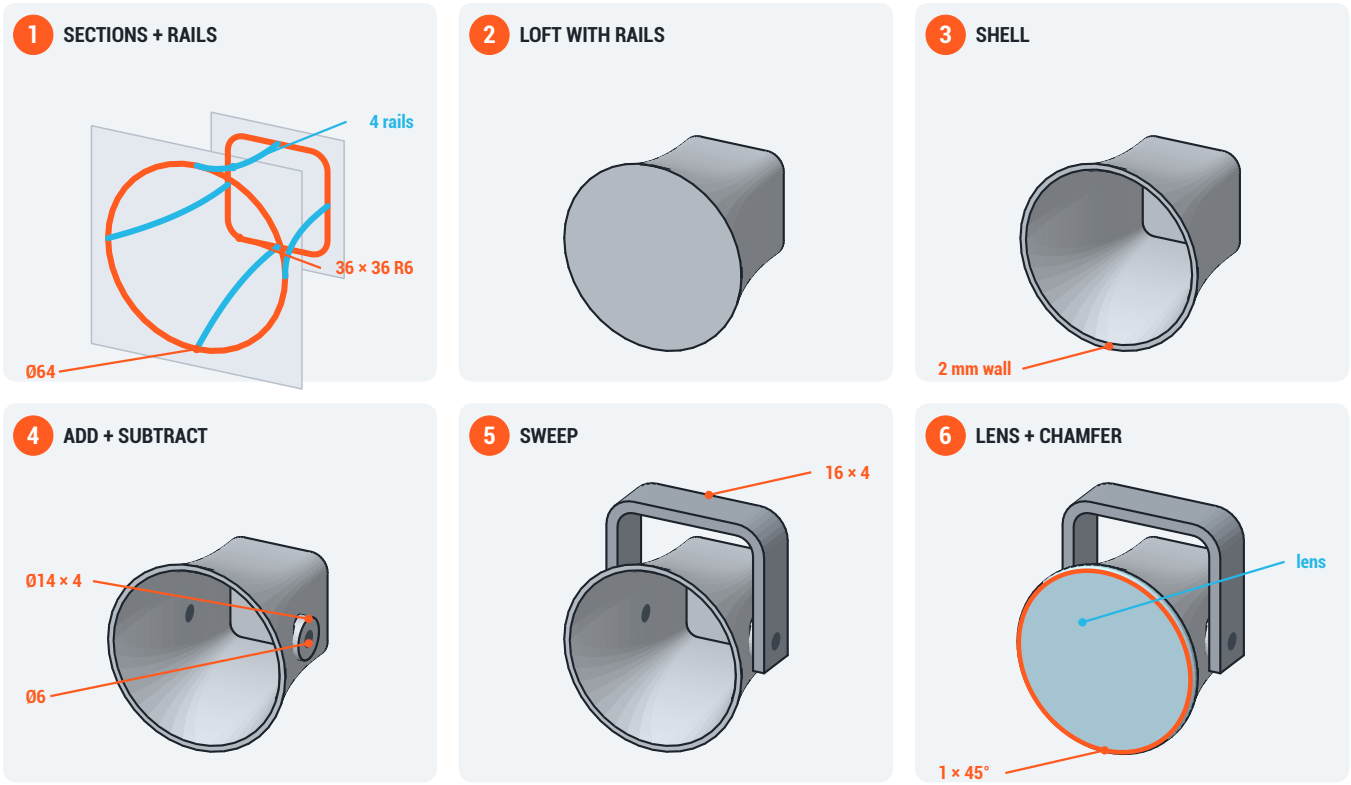

Fig 1 Stages used to model the searchlight housing and yoke. Only one side is shown at Stage 4; the other side is the same.

3 Refer to Fig 1.

(a) Describe how the housing at Stage 2 was modelled from Stage 1. Refer to the planes, the profiles and the rails.

3

(b) State the edit made between Stage 2 and Stage 3. Include the size and the face involved.

2

(c) State the **two** Boolean functions used between Stage 3 and Stage 4, and the size of the tool body used for each.

2

(d) Describe how the yoke was modelled at Stage 5.

2

(e) The lens at Stage 6 was modelled top-down, in context with the housing. Describe how the lens was modelled, and explain **one** benefit of modelling it this way.

3

(f) State the edit made to the front edge of the lens at Stage 6.

1

4 The searchlight is aimed with a hand controller. Fig 2 shows its polygon cage before and after morphing.

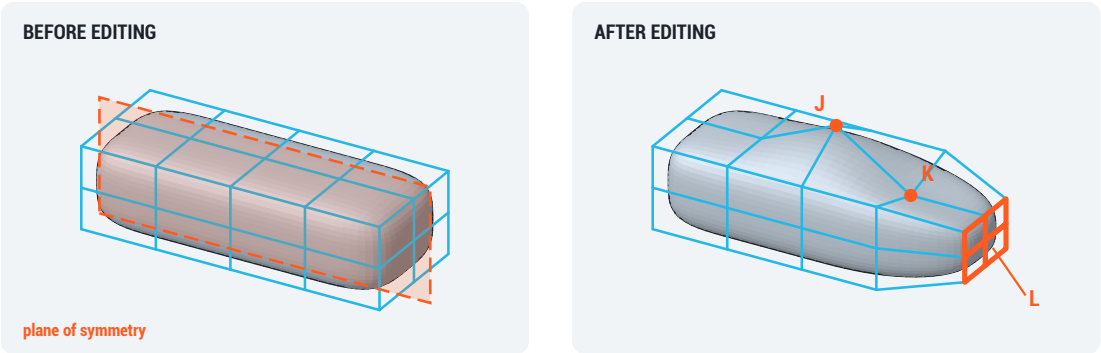

Fig 2 Hand controller cage (blue) and the smooth form it controls (grey).

(a) Describe the edits made to the cage at J, K and L, and the setting that kept the controller symmetrical.

3

(b) Explain **one** advantage and **one** limitation of morphing for this product.

2

5 Describe how the housing at Stage 3 (Fig 1) could be modelled using **surface** modelling instead of a solid loft and shell. Refer to the curves, the surface tools and how the 2 mm wall is made.

4

6 Fig 3 shows box A, cylinder B and four results, P to S. Each result is one body made by a single Boolean function.

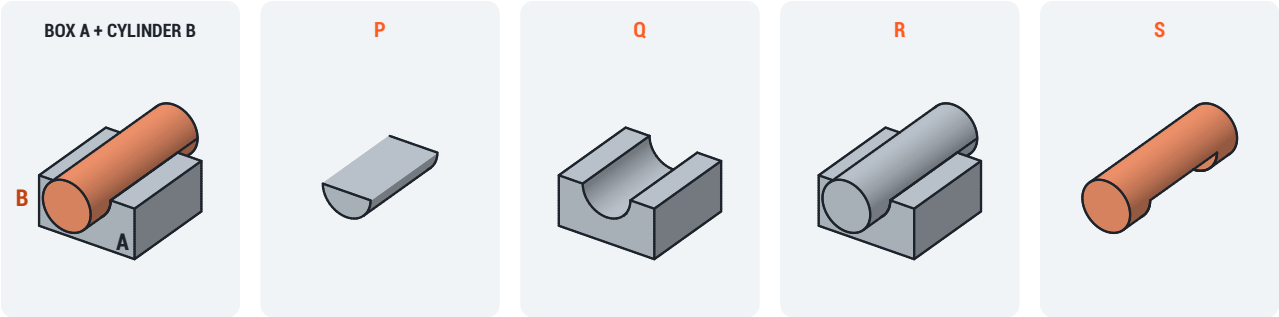

Fig 3 Boolean results from box A and cylinder B.

(a) Identify the Boolean function used for each result. For a subtraction, state which body was subtracted from which.

P _____ **Q** _____

R _____ **S** _____

4

(b) The housing is exported as an STL file at a low polygon count for a 3D-printed prototype. Explain the effect this has on the prototype and on the file.

2

EXAM INTEL **DESCRIBE THE MODELLING**

For each stage name the **plane**, the **profile with its sizes**, the **feature** and any **edit**: "a 16 × 4 rectangle on a plane through the boss centres, swept along a U-shaped path with R8 bends". "Used sweep" alone gains nothing.

designclass design | engineering | technology © DesignClass 2026 · designclass.co.uk · Free for use in Scottish schools

TOTAL 34 MARKS