WORKSHEET 06 · CAD & ENGINEERING GRAPHICS

SIMULATION: FEA, CFD & ANIMATION

Set up and interpret finite element and fluid dynamics tests, check results by hand, run your own airflow test and plan a mechanical animation.

06

COURSE NOTES **CH 06** TIME **60 MIN** TOTAL **27 MARKS** EDITION **PRINT**

NAME _____ CLASS _____ DATE _____

LEARN IT THE ESSENTIALS

FEA AND CFD

- **FEA set-up**: geometry, material, constraints, loads, type of analysis (static or dynamic), scale of units, mesh, solve.
- **Results**: von Mises stress (MPa), displacement (mm), strain. **Factor of safety** = strength ÷ maximum stress; below 1 the part fails.
- **CFD set-up**: domain, materials, fluid type, flow and environmental conditions, units, mesh.

TRUST, MOTION AND IMPACT

- Check a result: refine the mesh, hand-calculate a value, then validate with a physical test.
- **Mechanical animation** uses the assembly's joints (rigid, revolute, slider…) and limits to show motion, assembly and clashes.
- Digital tests: fewer prototypes and less waste, but only as good as the inputs.

MISSION BRIEF Field tests show that a prop guard can hit a boulder during a hard landing. The team tests one strut of the PA12 guard (Fig 1) with FEA. Supplier data for SLS PA12: Young's modulus 1700 MPa, Poisson's ratio 0.39, tensile strength 48 MPa.

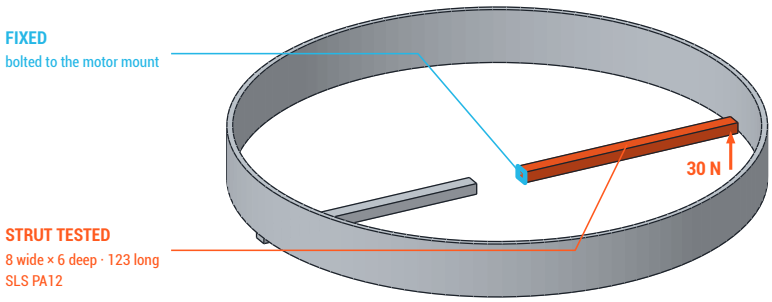

Fig 1 SUMMIT-X prop guard: the strut tested, its fixing and the load (from the model).

1 Describe the FEA set-up for this test. Give the value or choice for each stage named.

MATERIAL _____

CONSTRAINTS _____

LOAD _____

TYPE OF ANALYSIS _____

4



Fig 2 Illustrative simulated output: von Mises stress in the strut, Design A and Design B, same colour scale. P is on the top edge, 20 mm from the fixed end. Computed for this worksheet with a 2D plane-stress model.

2 Refer to Fig 2.

(a) Calculate the factor of safety for Design A. State what it predicts.

2

(b) Calculate the stress at P for Design A by hand to check the FEA value. Treat the strut as a beam: M = force × distance from the load; I = $bh^3 \div 12$; stress = M × y ÷ I, where y is half the depth. Show your working and state whether the FEA can be trusted.

3

(c) Design B adds about 4 g to each strut. Explain whether Design B should replace Design A. Use evidence from the output.

4

3 The searchlight hangs below SUMMIT-X in a crosswind. Two shapes for the rear of its housing were tested with CFD (Fig 3).

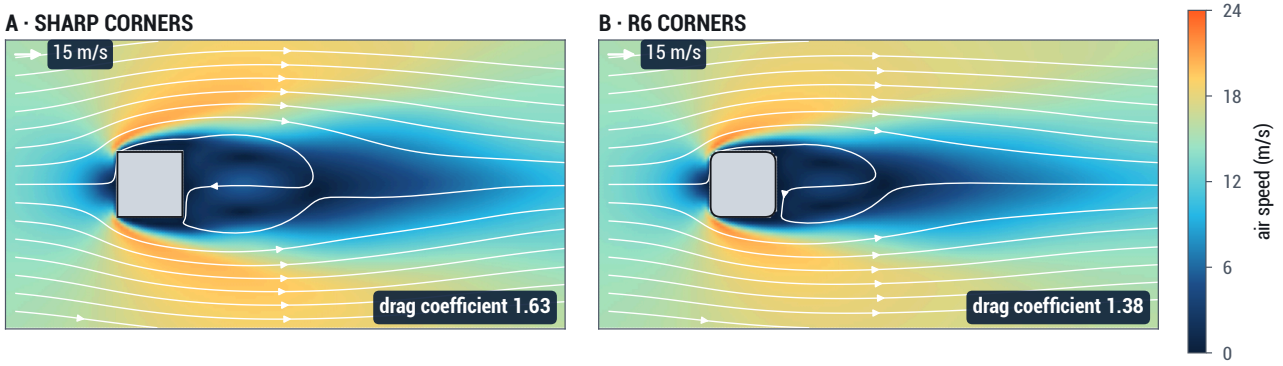

Fig 3 Illustrative simulated output: time-averaged air speed around two 36 × 36 housing sections in a 15 m/s crosswind (2D lattice-Boltzmann solver at a reduced Reynolds number, scaled to 15 m/s). Lines are streamlines.

(a) Describe **two** differences between the airflow around section A and section B.

2

(b) Explain how the choice of section could affect SUMMIT-X when it hovers over a casualty. Use evidence from the output.

3

(c) State **one** limitation of this 2D test.

1

4 Explain **one** environmental benefit and **one** drawback of testing the guard with FEA instead of drop-testing printed guards.

2

5 Practical: use the DesignClass CFD airflow tool at **https://detscotland.co.uk/CFD/**. Draw or choose a square, a rounded square and a circle of the same width. Test each at the same wind speed and record what you see. Use the tool's own view and reading options — the names may differ from those here.

SHAPE	SKETCH OF THE FLOW AND WAKE	WAKE WIDTH (NARROW / MEDIUM / WIDE)	DRAG OR FORCE READING (IF SHOWN)
Square (sharp corners)			
Rounded square			
Circle			

Explain whether your results support the change from section A to section B in Fig 3.

2

6 A mechanical animation will show the searchlight tilting on its yoke (Worksheet 05, Fig 1).

(a) Name the joint between the housing and the yoke, and state its freedom of movement.

2

(b) Explain why a joint limit must be set, and how the animation helps the design team.

2

designclass design | engineering | technology © DesignClass 2026 · designclass.co.uk · Free for use in Scottish schools

TOTAL 27 MARKS