FOR OFFICIAL USE

National Qualifications 2026

Mark

X835/76/01 Graphic Communication

MONDAY, 11 MAY
1:00 PM – 3:30 PM

X8357601

Fill in these boxes and read what is printed below.

Full name of centre

Town

Forename(s)

Surname

Number of seat

Date of birth
Day Month Year

Scottish candidate number

Total marks — 90

Attempt ALL questions.

You may use a calculator.

All dimensions are in mm.

All technical sketches and drawings use third angle projection.

You may use rulers, compasses or trammels for measuring.

In all questions you may use sketches and annotations to support your answer if you wish.

Write your answers clearly in the spaces provided in this booklet. Additional space for answers is provided at the end of this booklet. If you use this space you must clearly identify the question number you are attempting.

Use **blue** or **black** ink.

Do not remove any exam materials. You must leave this booklet on your desk; if you do not, you could lose all the marks for this paper.

Qualifications Scotland
Teisteanasan Alba

X8357601 01

© Qualifications Scotland 2026

Total marks — 90

Attempt ALL questions

For **questions 1 (a) to (f)**, refer to the information provided on **supplementary sheets 1 and 2.**

A three-fold leaflet has been created for the independent cinema, Cinemazy.



1. (a) Describe, giving **two** examples, how the graphic designer's use of contrast has enhanced the layouts. **2**

(b) Describe, giving **two** examples, how the graphic designer has created rhythm to enhance the layouts. **2**

1. (continued)

(c) Describe, giving **two** examples, how the graphic designer has used value in the layouts. **2**

(d) Describe, giving **two** examples, how the graphic designer has created depth in the layouts. **2**

(e) Describe, giving **two** examples, how the graphic designer has used alignment in the layouts. **2**

(f) Explain, giving **one** example, why the graphic designer has used emphasis in the layouts. **1**

[Turn over

1. **(continued)**

The graphic designer created the logo for Cinemazy as a vector file and stored it in the cloud.



(g) (i) Describe **two** advantages of creating the logo in the vector file format. **2**

(ii) Describe **two** advantages of cloud storage. **2**

1. **(continued)**

The graphic designer has used cropping to edit the images used in the layouts.

Image 1	Image 2
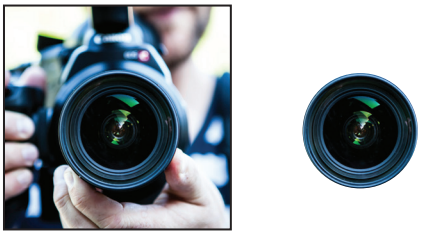 original ⟶ cropped	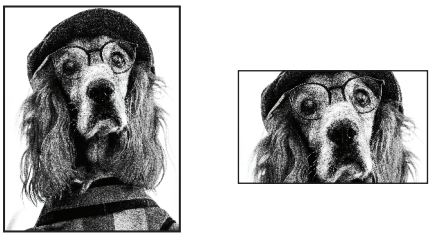 original ⟶ cropped

(h) State the name of the crop applied to the images shown above. **2**

(i) **Image 1** _____

Image 2 _____

(ii) Describe the effects that the two types of cropping have created within the layouts. **2**

_____

_____

_____

_____

The graphic designer used placeholder text in the preliminary layouts.

(i) Explain **one** advantage to the graphic designer of using placeholder text. **1**

_____

_____

_____

[Turn over

2. A tech company is developing a new virtual reality (VR) headset. A prototype is shown below.

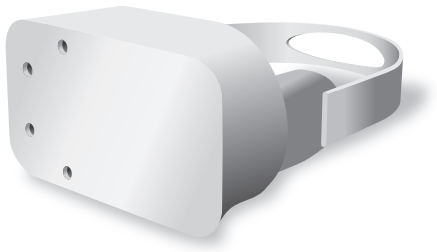

Bottom-up modelling was used to create the VR headset components.

(a) Describe the process of bottom-up modelling. **2**

For **questions 2 (b), c (i) and c (ii)**, refer to the information provided on **supplementary sheet 3**.

(b) Explain the purpose of the detail view D. **1**

(c) (i) State the name of the type of section shown at A-A. **1**

(ii) State the name of the type of section shown at C. **1**

[Turn over for next question

DO NOT WRITE ON THIS PAGE

2. (continued)

Two drawings of stage 1 of the VR headset are shown below. The drawing at the top is an orthographic showing the front elevation, end elevation and plan. The second drawing is also of stage 1 of the VR headset shown from the rear to make the profile easier to see.

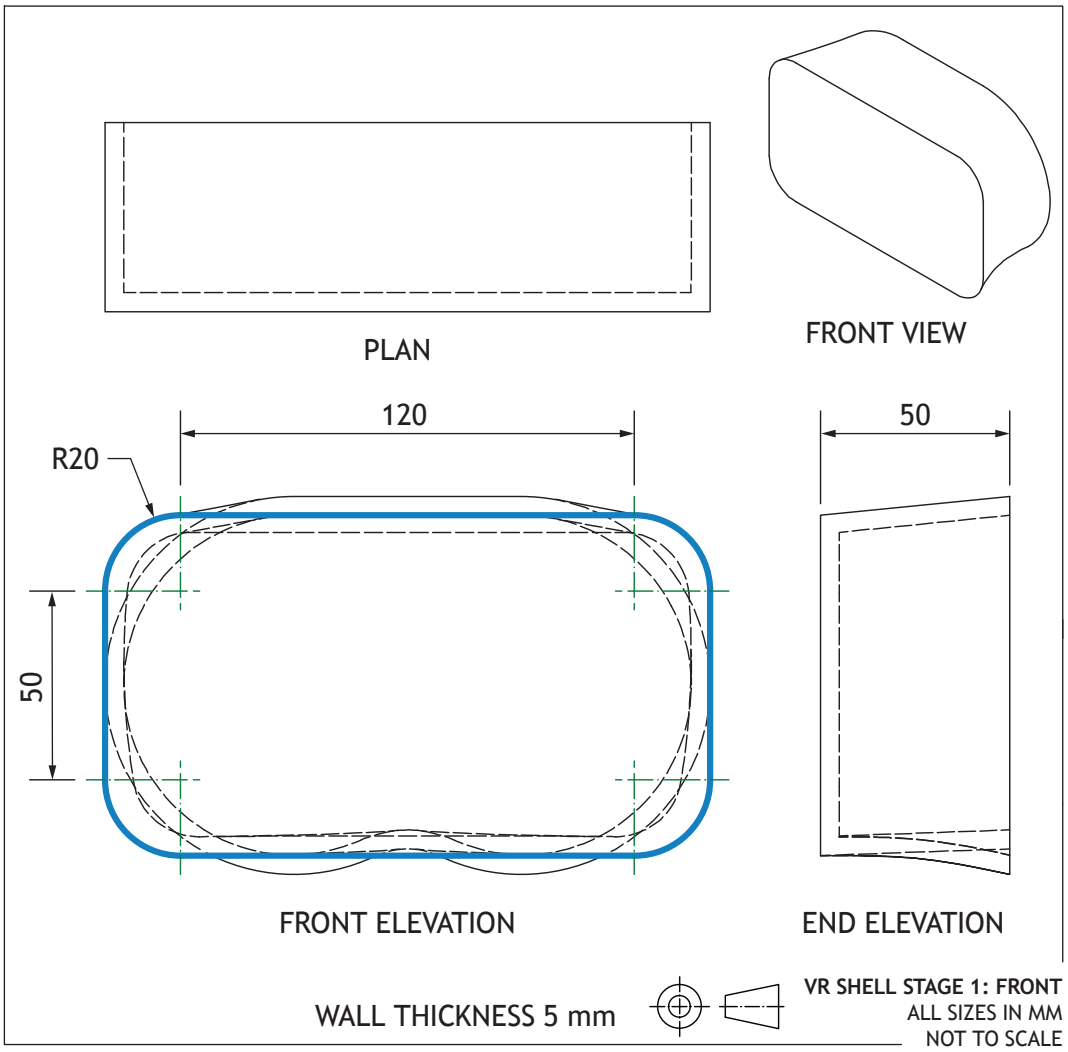

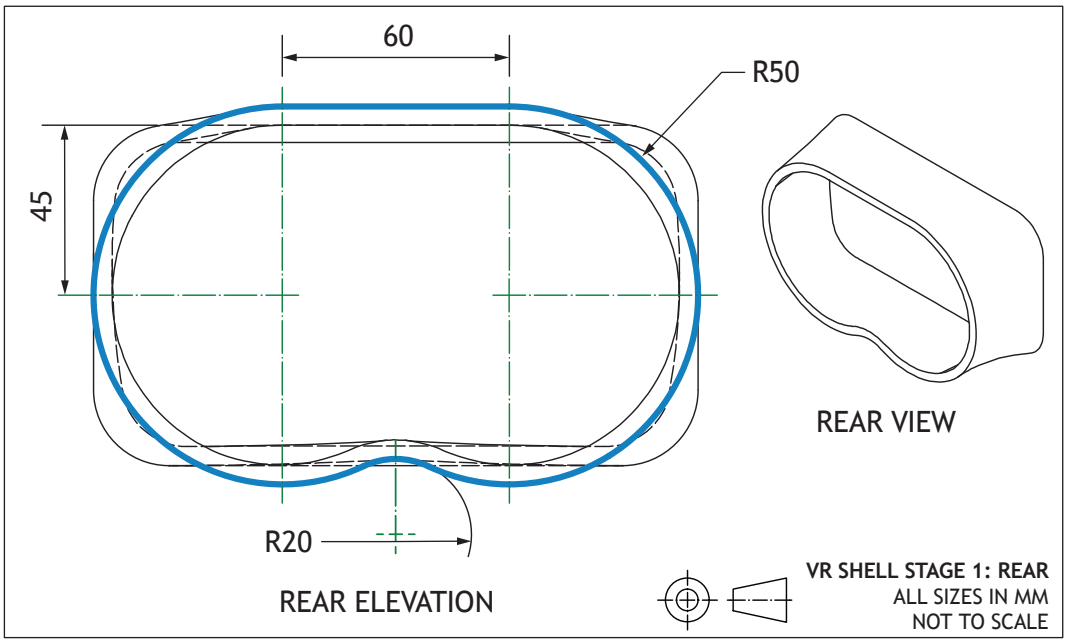

2. (continued)

MARKS DO NOT WRITE IN THIS MARGIN

(d) (i) Describe the 3D CAD modelling techniques used to create stage 1 of the VR headset component, shown in the drawings opposite.

You must reference the dimensions in the drawing of the front and rear of the VR headset, shown opposite.

You may use sketches to support your answer. **5**

[Turn over

2. (d) (continued)

In stage 2, a series of camera holes were added to the VR headset.

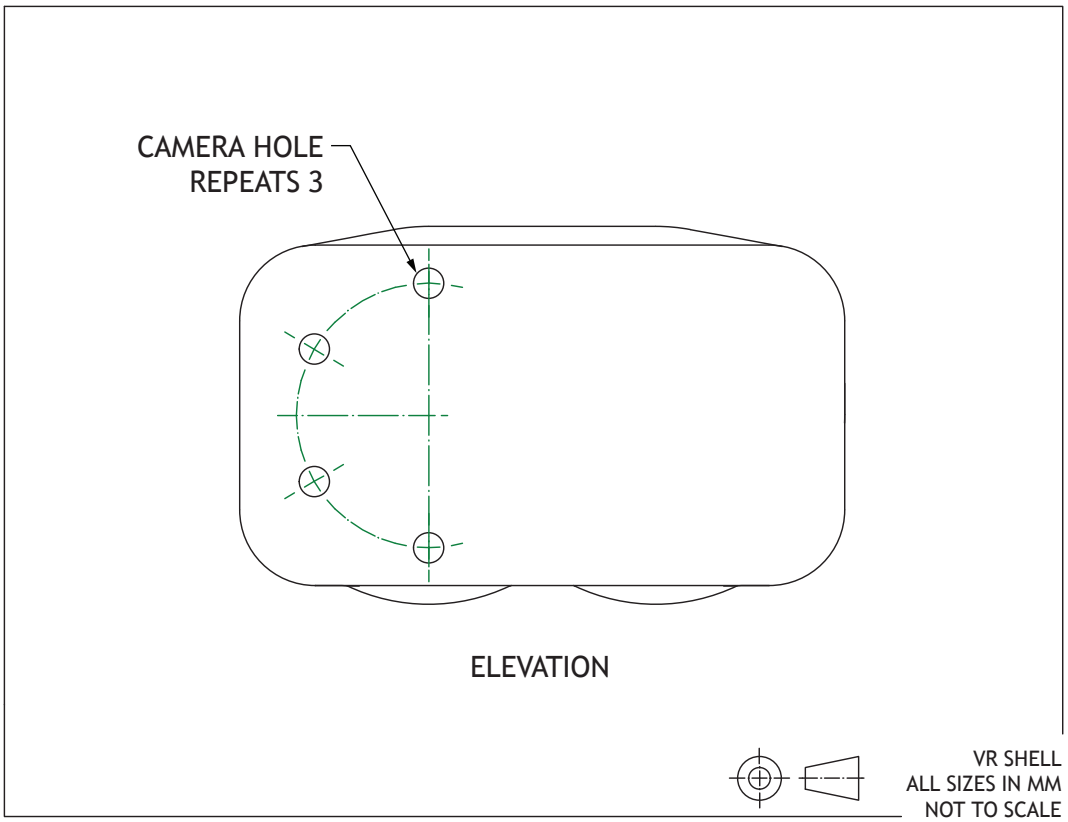

(ii) State the name of the 2D CAD command used to create the repeated feature in the drawing above. **1**

[Turn over for next question

DO NOT WRITE ON THIS PAGE

2. (continued)

DO NOT WRITE IN THIS MARGIN

A prototype for a VR controller charging stand is shown below.

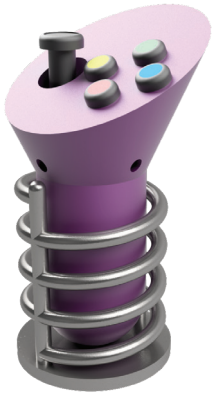



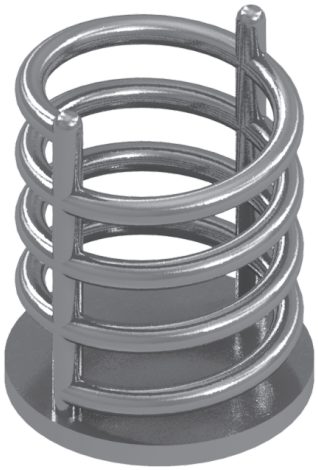

Stage 1 **Stage 2**

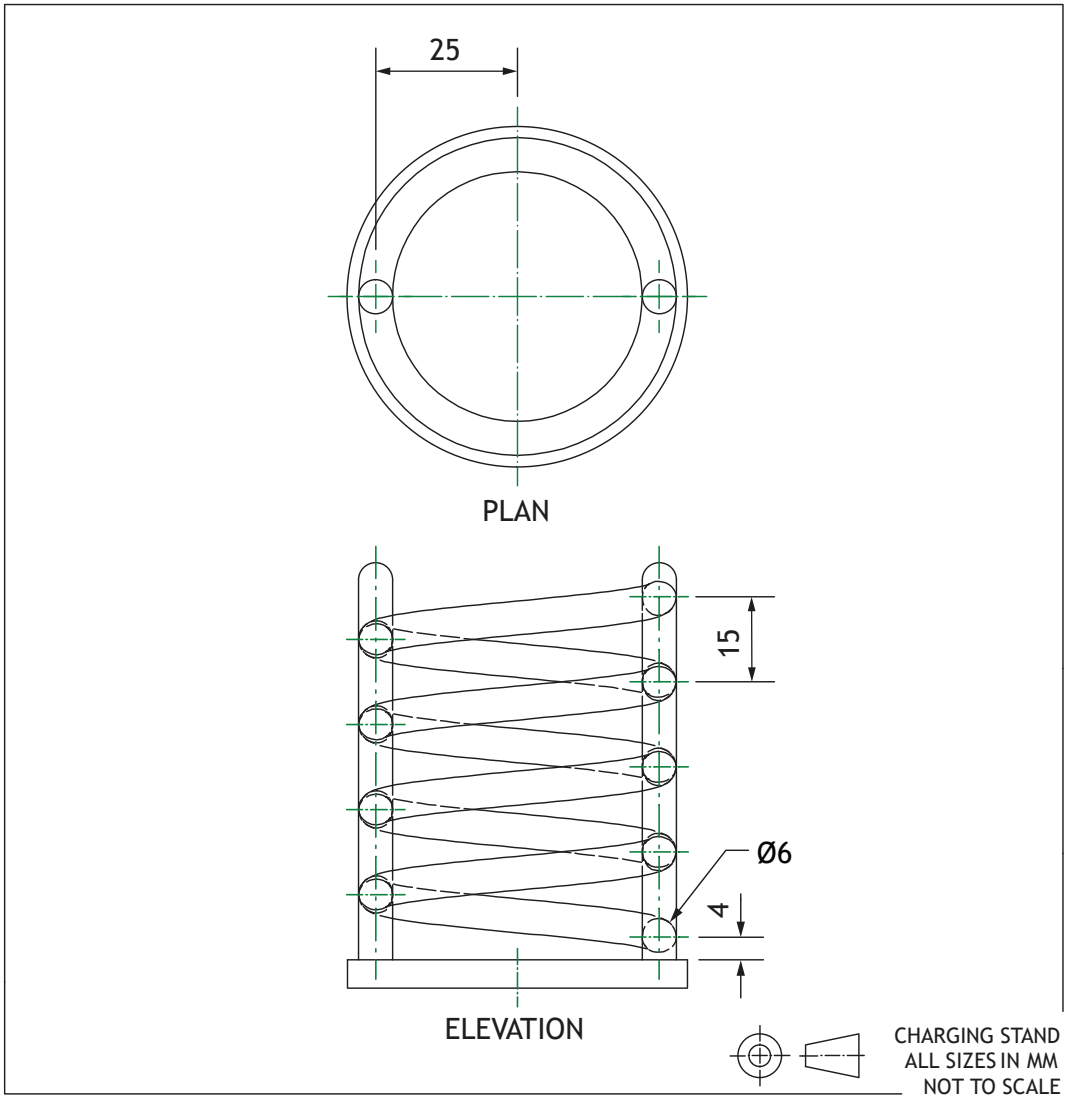

2. (continued)

(e) Describe the 3D CAD modelling techniques used to add the feature in **Stage 2** of the prototype controller charging stand, shown opposite.

You must reference the dimensions in the drawing.

You may use sketches to support your answer. **3**

2. (continued)

The tech company hires freelance CAD technicians to create 3D models. They all use different CAD software.

(f) (i) State a suitable file format the CAD technicians can use to share models. **1**

(ii) Explain why using this file format is beneficial to the CAD technicians. **1**

An error was made during the controller modelling process.

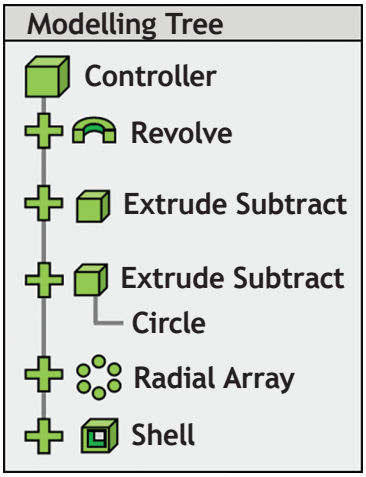



result with modelling error

expected end result

(g) Describe the change that needs to be made to the modelling tree to fix the error and achieve the expected end result. **1**

[Turn over for next question

DO NOT WRITE ON THIS PAGE

DO NOT WRITE IN THIS MARGIN

3. A wireless router is being developed using CAD.



3. (continued) **MARKS** DO NOT WRITE IN THIS MARGIN

An incomplete sectional view of the wireless router antenna is shown below.

(a) Complete the sectional view by adding appropriate hatching.
Use the information provided on **supplementary sheet 4**. **4**
(Additional graphics, if required, can be found on *page 36*.)

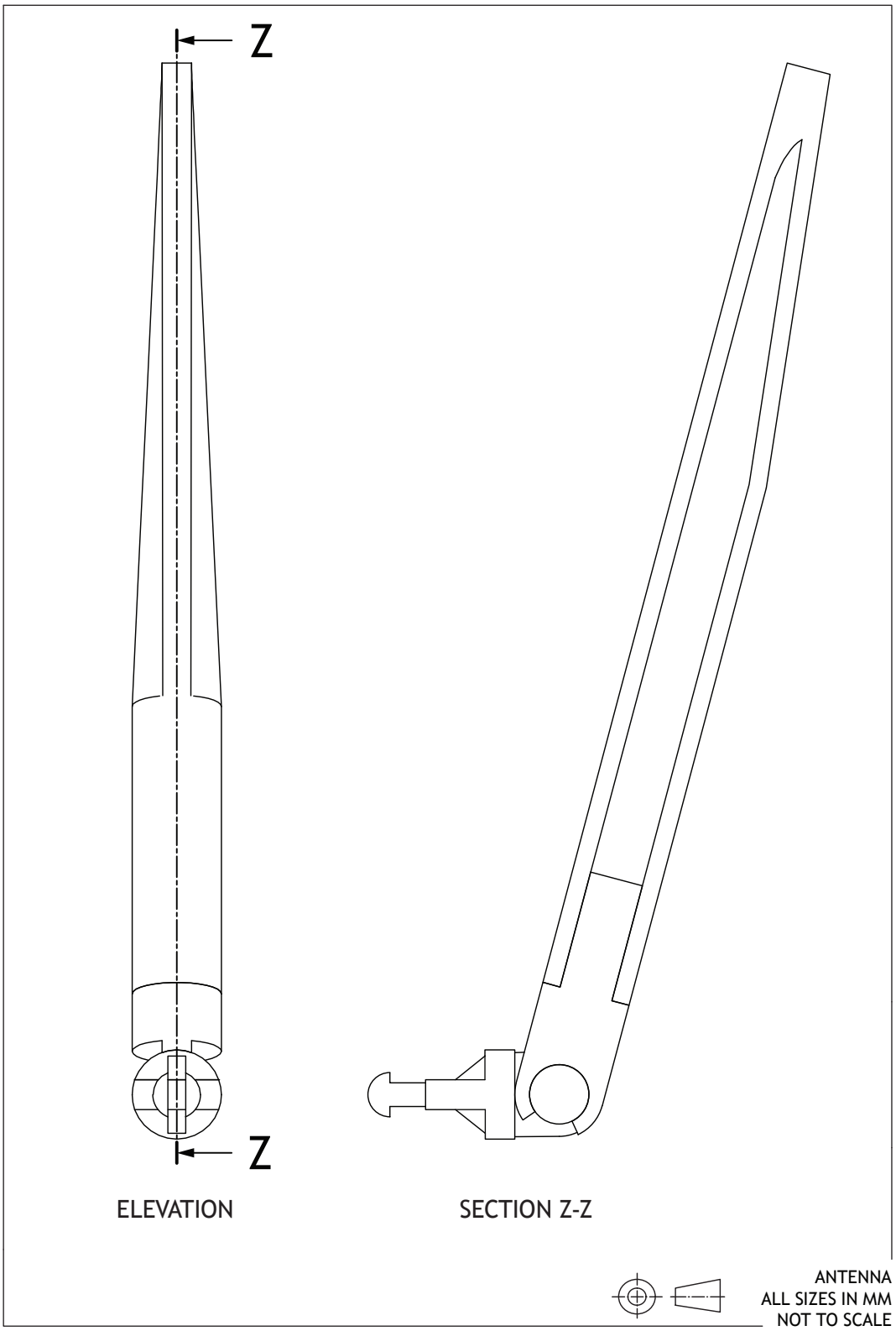

3. (continued)

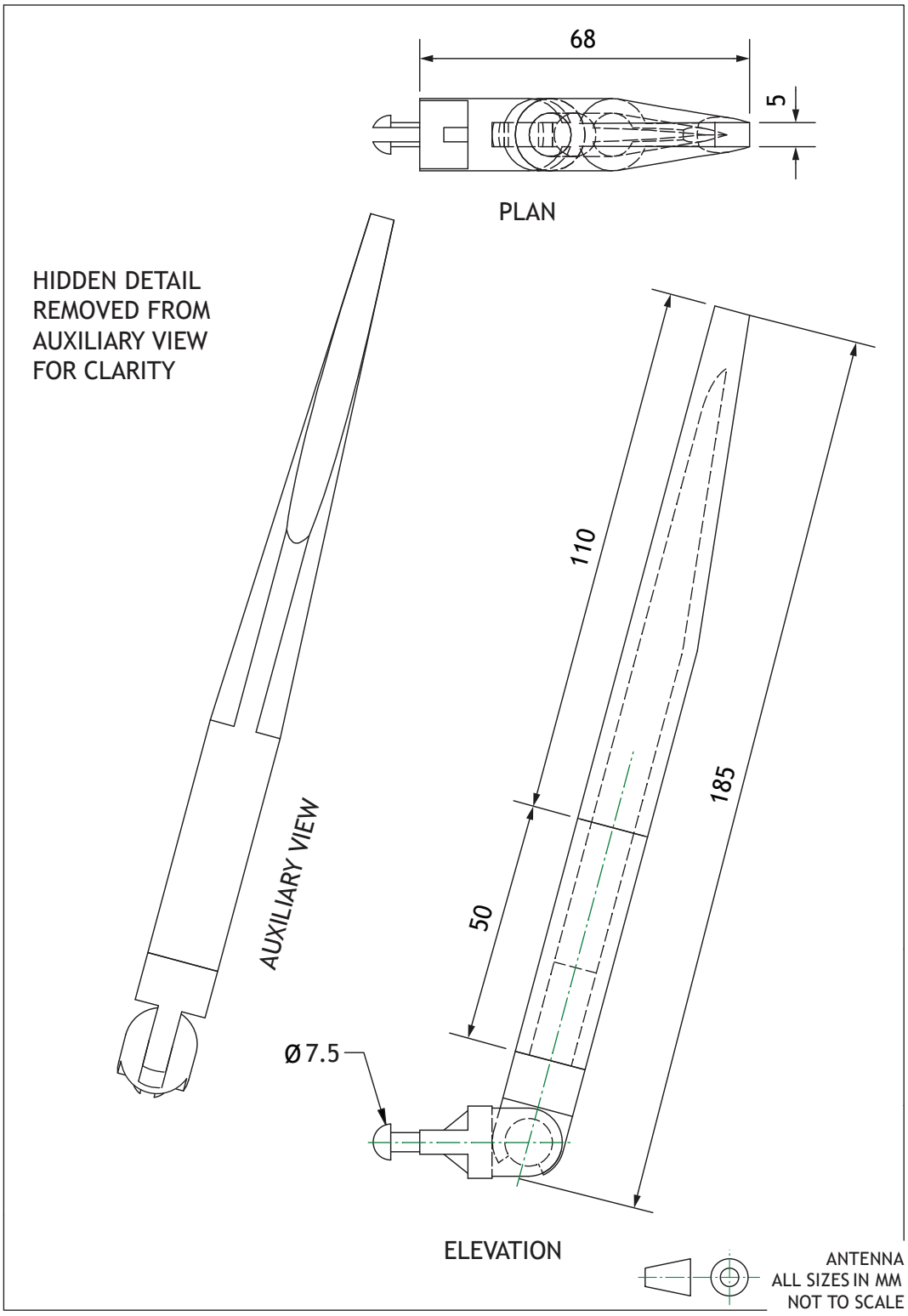
68
5
PLAN
HIDDEN DETAIL
REMOVED FROM
AUXILIARY VIEW
FOR CLARITY
110
185
AUXILIARY VIEW
50
Ø 7.5
ELEVATION
ANTENNA
ALL SIZES IN MM
NOT TO SCALE

3. (continued)

(b) Identify **three** errors which are not correct to British Standard conventions in the drawing of the antenna, shown opposite. **3**

1 _____

2 _____

3 _____

[Turn over

DO NOT WRITE IN THIS MARGIN

4. A tiling company has produced the assembled and exploded view of a grout float shown below.

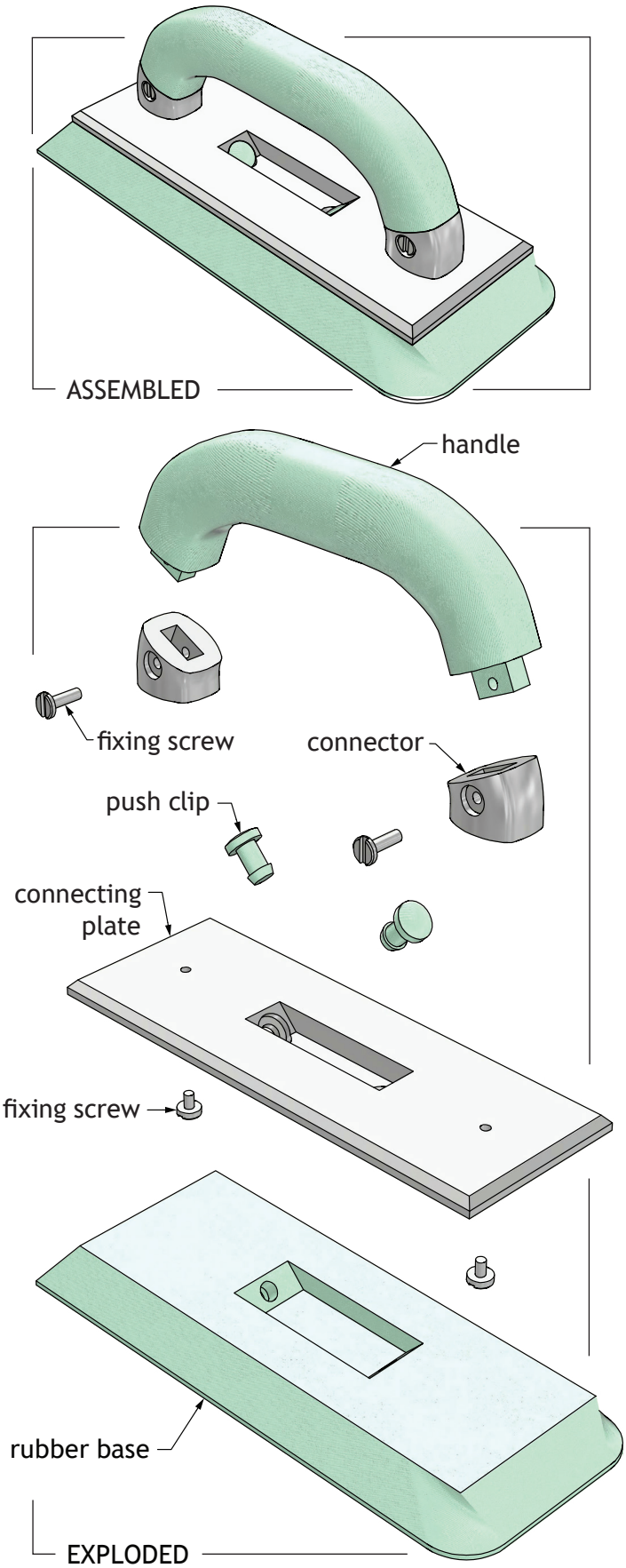

4. (continued)

(a) (i) Describe **two** examples of good practice in the exploded view. **2**

(ii) Describe, giving **two** examples, the purpose of an exploded view. **2**

[Turn over

DO NOT WRITE IN THIS MARGIN

4. (continued)

An orthographic drawing of the handle component is shown below.

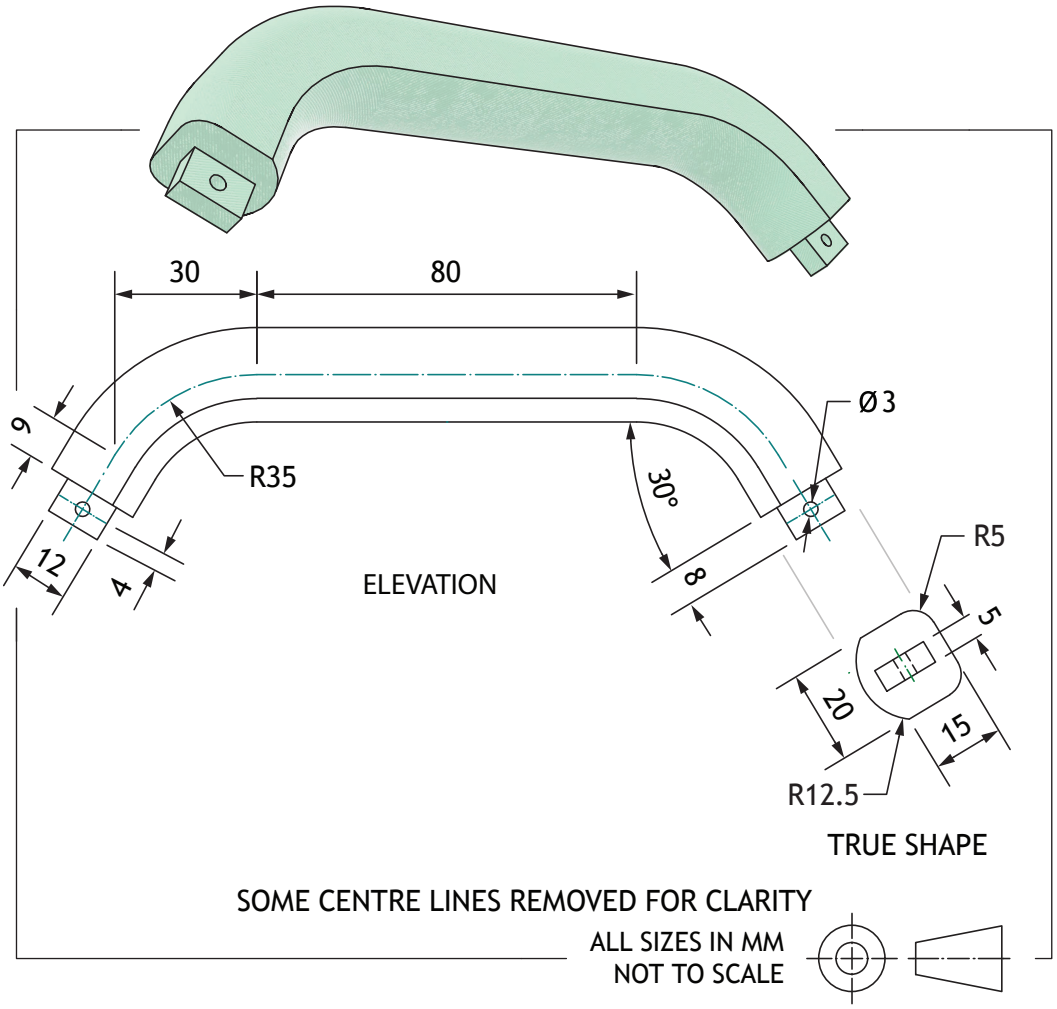

4. (continued)

(b) Describe the 3D CAD modelling techniques used to model the handle component, shown opposite.

You must refer to the dimensions given in the drawing.

You may use sketches to support your answer. **5**

[Turn over

DO NOT WRITE IN THIS MARGIN

4. (continued)

Graphics for a grout rake are shown below.

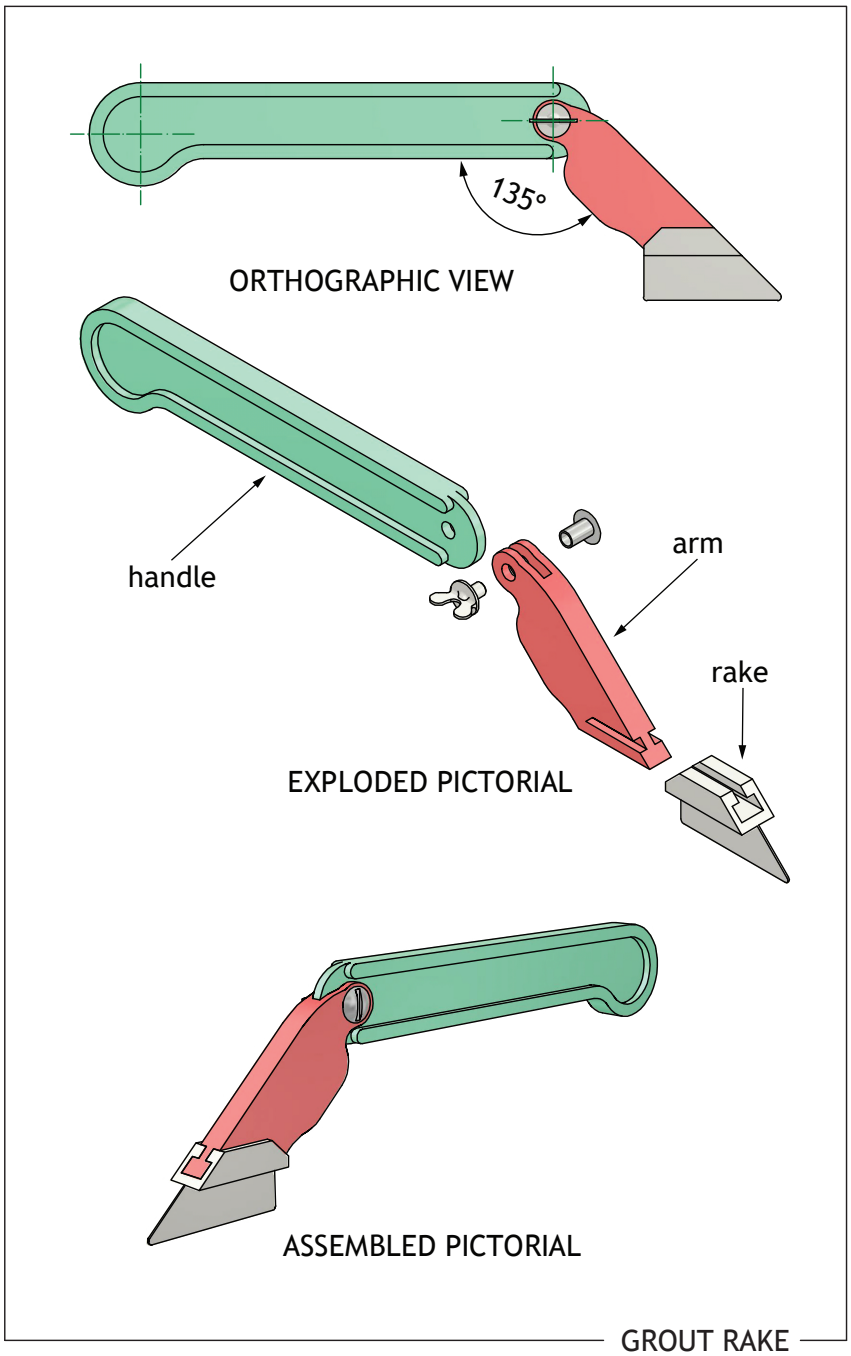

GROUT RAKE

4. (continued)

MARKS DO NOT WRITE IN THIS MARGIN

(c) Describe, using 3D CAD terms, how to constrain the three grout rake components, shown below.

You must constrain the arm and handle at a 135° angle to each other, as shown opposite.

You may annotate the drawings and use sketches to support your answer. **4**

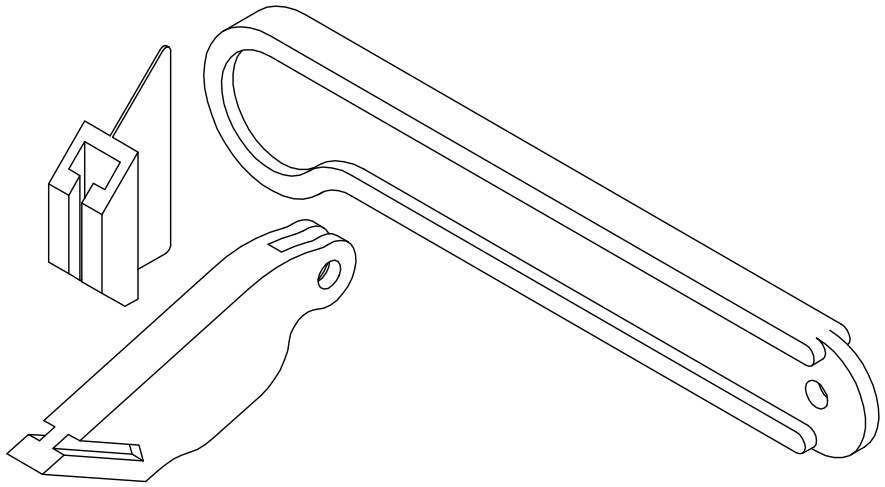

4. (continued)

The fixing bolt component was modelled using tangency.

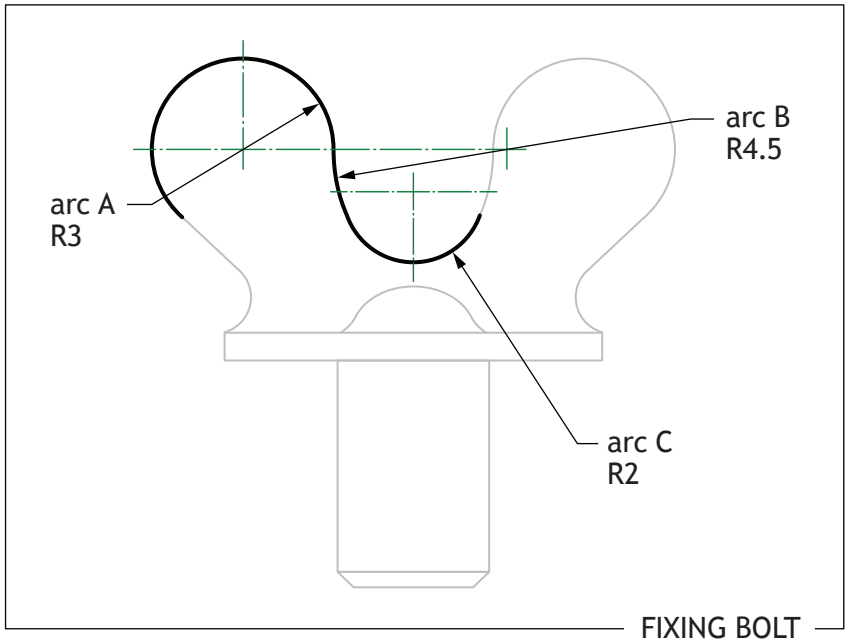

(d) Using the principles of tangency:

(i) calculate the distance from the centre of arc A to the centre of arc B **1**

(ii) calculate the distance from the centre of arc B to the centre of arc C. **1**

MARKS

DO NOT WRITE IN THIS MARGIN

Graphics for proposed packaging for the grout rake are shown below.

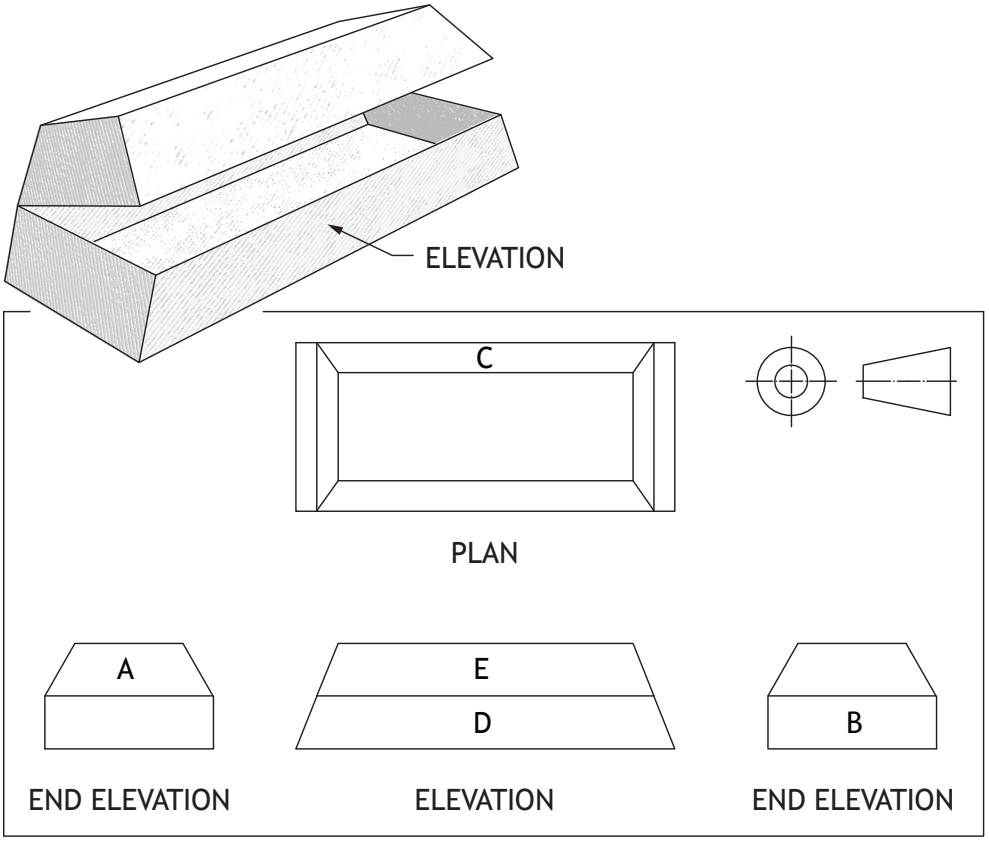

(e) Identify the position of faces A–E on the surface development below. **5**
The surface development is shown from the outside.
(An additional graphic, if required, can be found on *page 37*.)

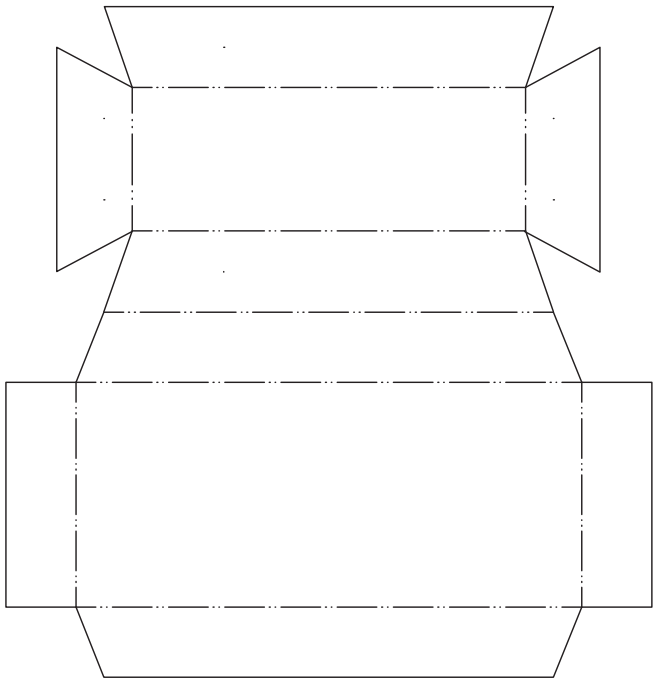

4. (continued)

Illustrations of the grout rake are shown below.

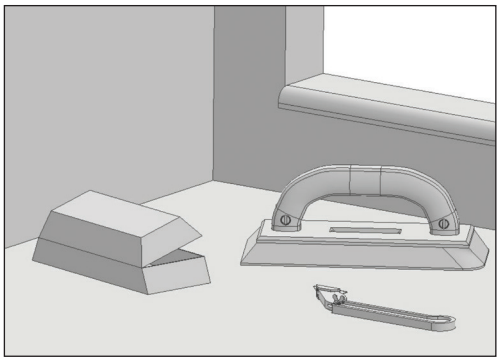

Illustration 1



Illustration 2

(f) Describe **two** 3D rendering techniques applied to produce the graphic shown in **Illustration 2**. **2**

(g) Describe, giving **two** examples, how the use of a sited environment can improve an illustration. **2**

[Turn over for next question

DO NOT WRITE ON THIS PAGE

5. A flyer for a soap company is shown below.

DO NOT WRITE IN THIS MARGIN

(i)



(v)

5. (continued)

(a) State the name of the desktop publishing symbols and techniques labelled on the flyer shown opposite.

(i) _____ **1**

(ii) _____ **1**

(iii) _____ **1**

(iv) _____ **1**

(v) _____ **1**

(b) State the **two** different types of text justification labelled on the flyer shown opposite. **2**

Text 1 _____

Text 2 _____

(c) Describe the benefit of using the desktop publishing technique bleed in the flyer. **1**

_____

_____

[Turn over

5. (continued)

The layout was produced using layers in DTP software.



(d) Describe **two** advantages to the graphic designer of using layers to produce the layout. **2**

The images used on the flyer were photographed by the company's graphic designer.

(e) Describe **two** benefits to the soap company of using images created by staff, rather than using stock images. **2**

5. (continued)

A digital version of the flyer was produced, shown below.



(f) Explain **two** benefits to consumers of accessing desktop published media digitally. **2**

[Turn over

5. (continued)

A CAD technician produced a site plan of the soap company's main depot.



site plan

(g) Describe, giving **four** examples, the information that the site plan communicates about the depot. **4**

5. (continued)

A floor plan of the main depot was also produced. The graphic featured a range of British Standard symbols. Two are shown below.



symbol A symbol B

(h) State the name of symbols A and B. **2**

(i) Symbol A _____

Symbol B _____

(ii) Describe, giving **two** examples, how a CAD library would be useful for the CAD technician when producing the floor plan. **2**

_____

_____

_____

_____

[END OF QUESTION PAPER]

ADDITIONAL SPACE FOR ANSWERS

Additional graphics for question 3 (a)

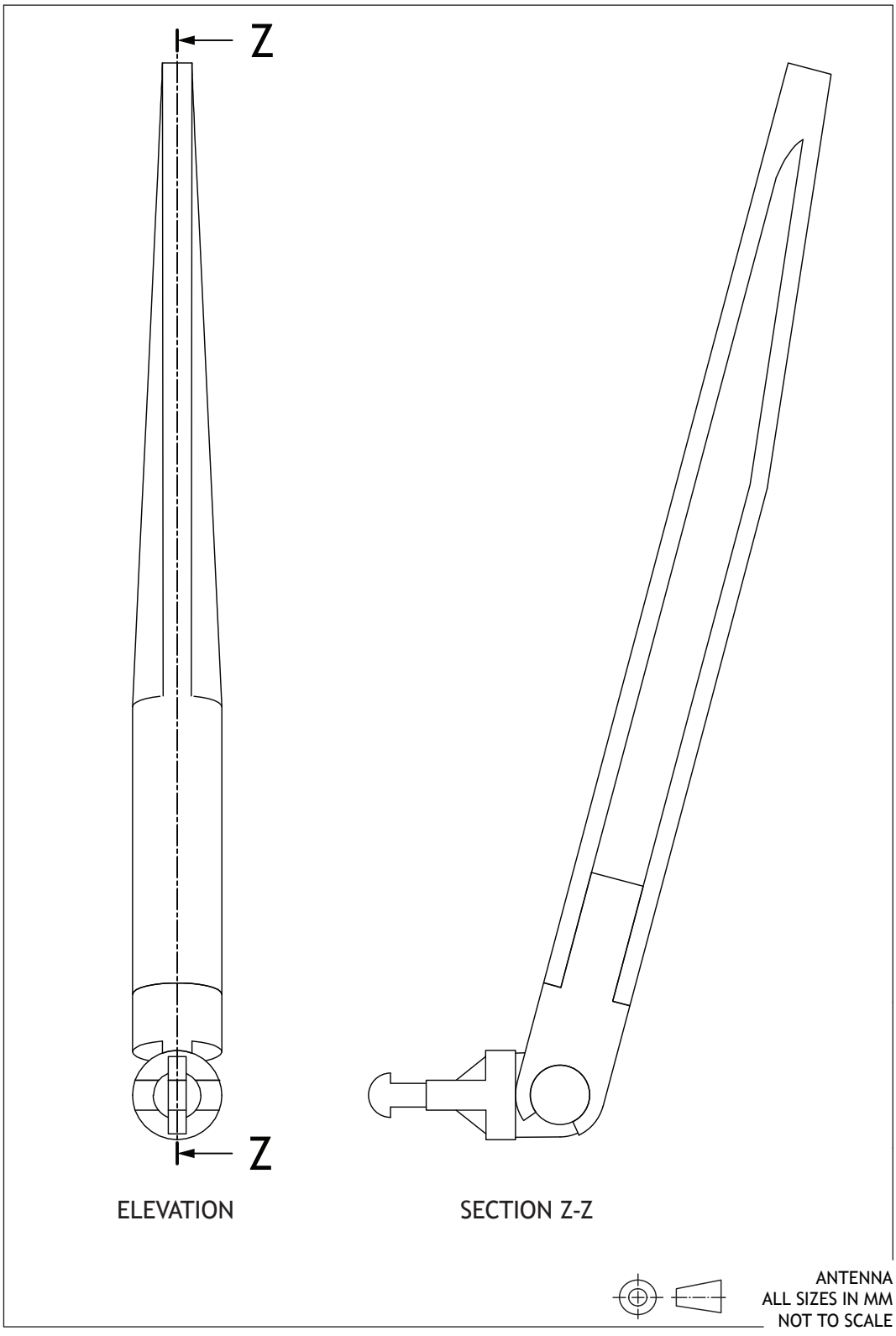

DO NOT WRITE IN THIS MARGIN

ADDITIONAL SPACE FOR ANSWERS

Additional graphic for question 4 (e)

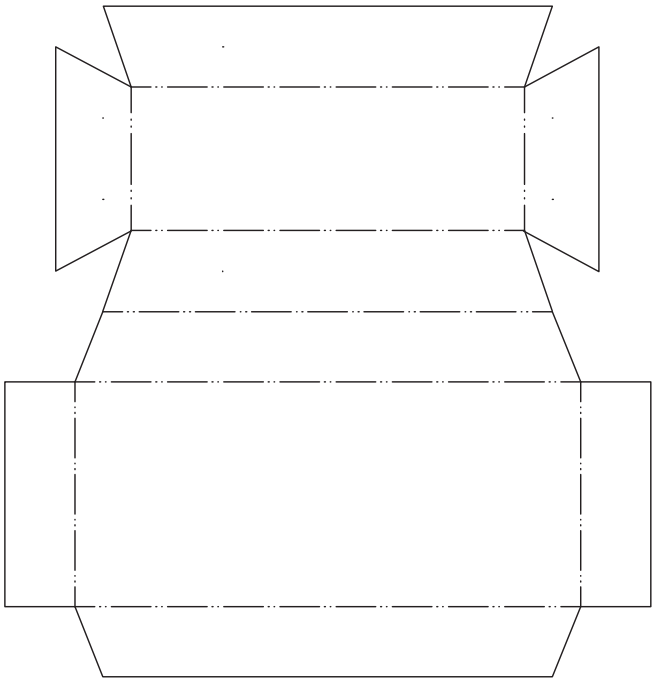

DO NOT WRITE IN THIS MARGIN

ADDITIONAL SPACE FOR ANSWERS

DO NOT WRITE IN THIS MARGIN

ADDITIONAL SPACE FOR ANSWERS

[BLANK PAGE]

DO NOT WRITE ON THIS PAGE

Acknowledgement of copyright

Question 1	JuneKawaiiart/pexels.com
	Pixabay/pexels.com
	Alex Dos Santos/pexels.com
	Andre Furtado/pexels.com
	Donald Tong/pexels.com
	Pietro Jeng/pexels.com
	Dmitry Demidov/pexels.com
Question 1 (h)	Terje Sollie/pexels.com
	Alex Dos Santos/pexels.com
Question 5 (h)	Two British Standards symbols are reproduced by kind permission of British Standards Institution.