National
Qualifications
2026

X835/76/11

Graphic Communication
Supplementary sheets

MONDAY, 11 MAY
1:00 PM – 3:30 PM

Supplementary sheets 1 and 2 for use with question 1 (a) to (f).

Supplementary sheet 3 for use with question 2 (b) and (c) (i) and (ii).

Supplementary sheet 4 for use with question 3 (a).

Qualifications Scotland
Teisteanasan Alba

X8357611

A/PB
© Qualifications Scotland 2026


Coming Soon
Animation
Action
Comedy
Romance
We Support Independent Films
Is dolupita sam est, off ic
res dit iuntur recesto tate
iminvenisit laborerit que
qui coruptate comni aut
tur, sum fugit, volup
tatia net et aut labor
Raturis aceatem ra
nos rerum volorep
iunt. Untem. Tem
faccusapis reici de
atem. Nam inturi
aut.
BECOME A MEMBER TODAY.
www.cinemazy.co.uk



id earum
sequi ut
non prorum
que sinc

Aliquunt. Dent acculparum erore nosam ab quunt destrunt explita quodia di onet fugia invelles odit id eatur sume nia quas ipsum re sit voluptatur?

Quia in coribus dissece arioristi sintur? Debiti debis ditecero vit, to exerupt aeperes por ac cuscium re audae dipw.

w.cinemazy.co.uk

Behind the scenes of Jordan Henry's new

On Set

Ptur, culla est volut estiberum fugiatesti ommodip santota temolore occupiet et endesequi volo et et quis ellecum que? odic id ele cus a qui intur a do luptatio ex erepedipsam cuscia inimodi ilibus.

"I do all of my own editing. I think it makes my movies feel more unified.

Nequi as coreper un vendant as eturitatiu vollo plab Cus esci expe beaque essequidis n tempedis id minum exerum quae nist, ve

Off Screen

Cus molut quo alu voluptium que a inci doloren fdae rum quo dolo reh.Gil hor loctui conu ventebu scipteb emolute ipteribuncus habent, sid de in te comnena, clegeris.



On the set of "Bad Inhal

Scottish Film

Ivestro Catus, vastrei co untilicam intea te deti, poria mus intili es in se tem co nonsidi in te publium idem aperiu mendam. Vivid ressessit etra Serditaturbi ilnest cavem te..

Confectionery Prices

Members get up to 40% off!

Popcorn (small)	£3
Popcorn (large)	£4
Soda (small)	£2
Soda (large)	£3
Chocolate (small)	£2
Chocolate (large)	£4
Sweet Mix (small)	£3
Sweet Mix (large)	£5
Hot Dog (small)	£3
Hot Dog (large)	£4



Become a member at www.cinemazy.co.uk

w movie

debitaquia net ra
s ut ute ipissum
rerum el et iscipsae
o. Nam ipsunt.
nonsed magnimint
d magnam eum quiatet
erferspid mil iumqui
et por alia nonsequo
simus apitae se non nis
ernat voluptatur?

pitant" - Scotland





Halloween Horror night!



October 29th

The Wedding



October 30th

Night in London



October 31st

Waiting Red

Supplementary sheet 3 for use with questions 2 (b) and (c) (i) and (ii)

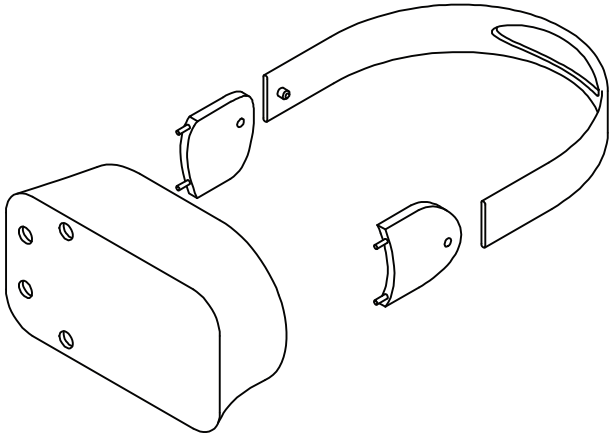

EXPLODED ISOMETRIC

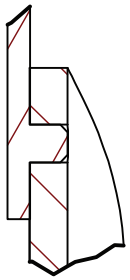

DETAIL VIEW D (1 : 1)

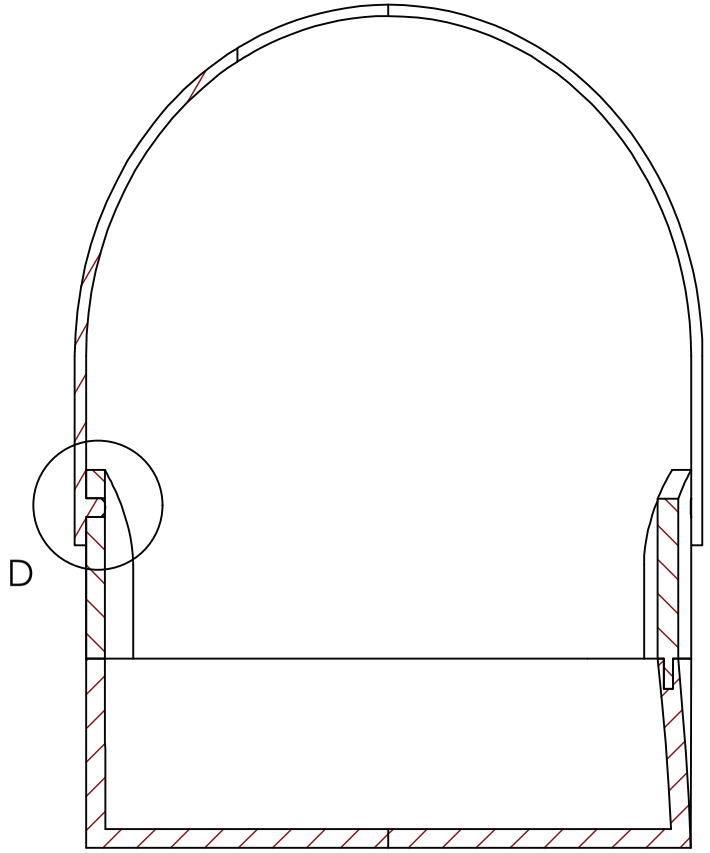

SECTION A-A

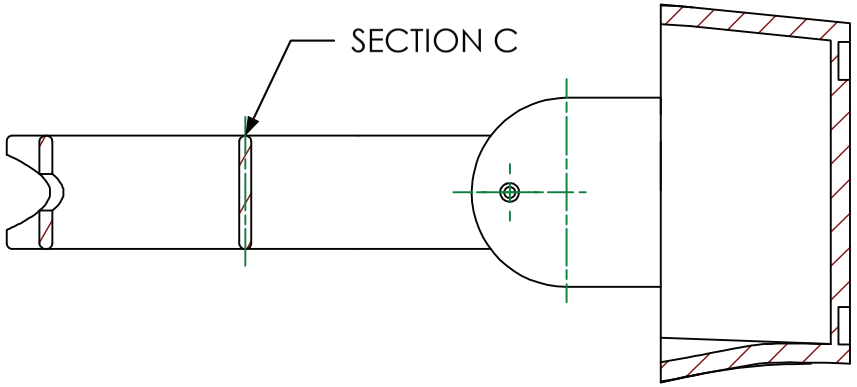

SECTION B-B

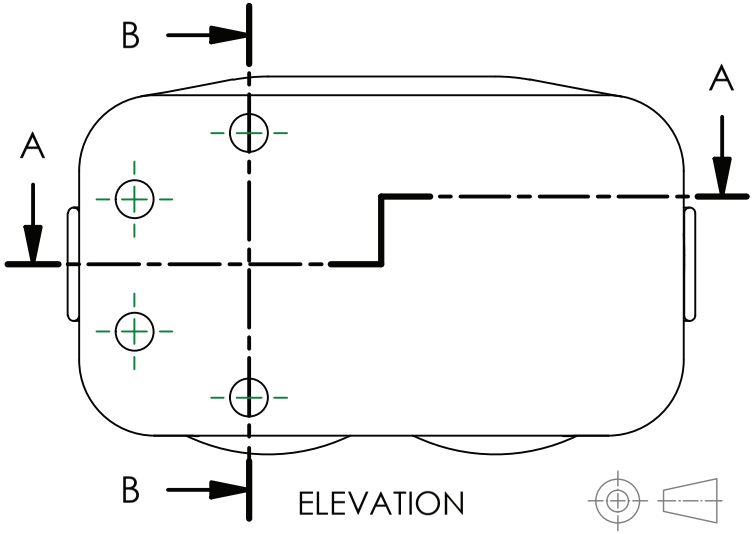

ELEVATION

VR HEADSET
ALL SIZES IN MM
NOT TO SCALE

Supplementary sheet 4 for use with question 3 (a)

PARTS LIST		
ITEM	QTY	PART NUMBER
1	1	Clip
2	1	Connector
3	1	Antenna

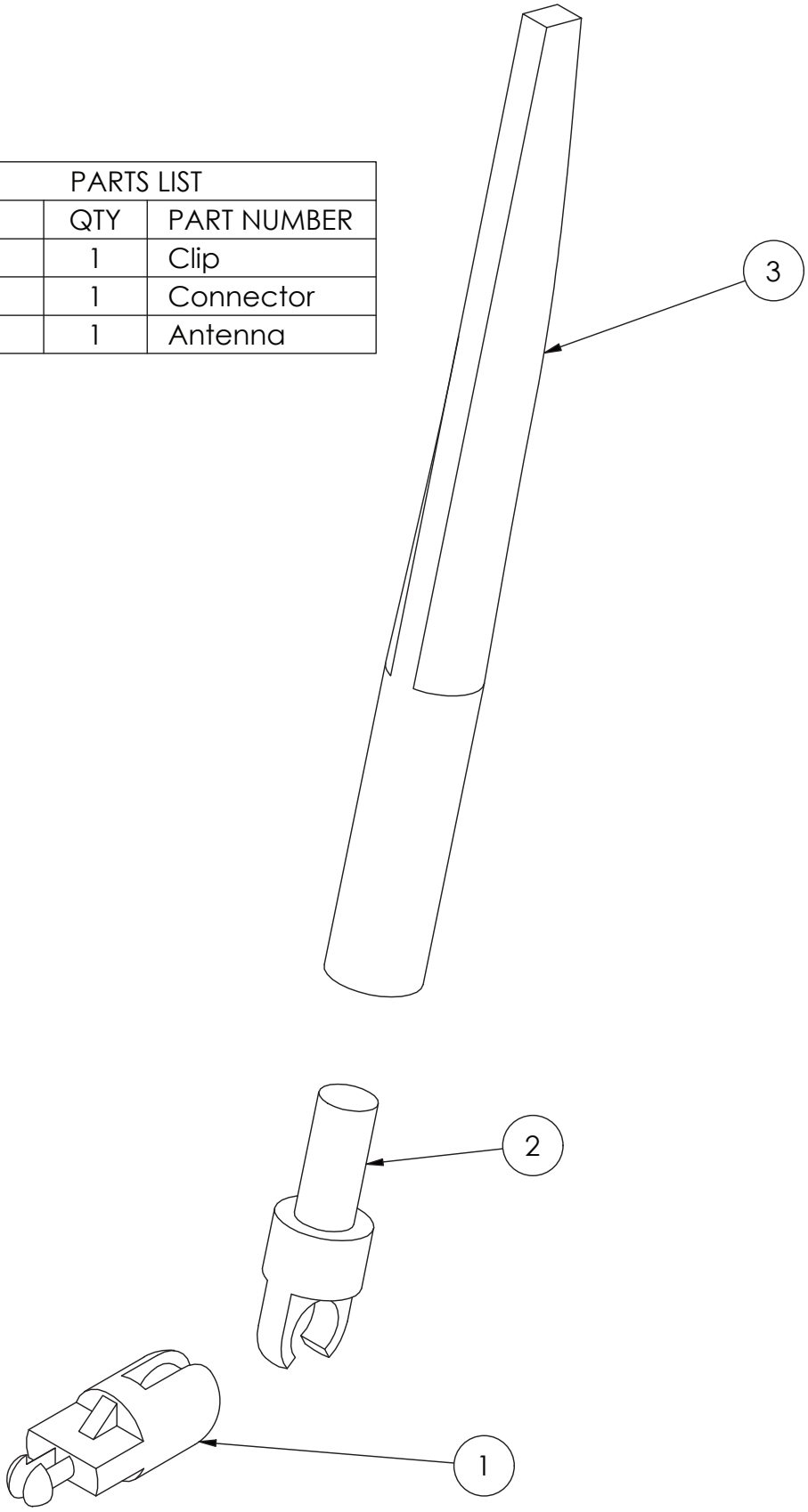

ANTENNA EXPLODED
ALL SIZES IN MM
NOT TO SCALE

[BLANK PAGE]

DO NOT WRITE ON THIS PAGE

Acknowledgement of copyright

Supplementary sheet 1	JuneKawaiiart/pexels.com
	Pixabay/pexels.com
	Alex Dos Santos/pexels.com
	Andre Furtado/pexels.com
	Donald Tong/pexels.com
	Pietro Jeng/pexels.com
	Dmitry Demidov/pexels.com
	Tima Miroshnichenko/pexels.com
Supplementary sheet 2	Maksim Romashkin/pexels.com
	Pixabay/pexels.com
	Terje Sollie/pexels.com
	Anton Massalov/pexels.com
	cottonbro studio/pexels.com
	Kalistro/pexels.com