Capstone: snow-making controller

AIM

Design, build, simulate and test a controller for a snow cannon at Cairnloch ski centre (fictional). It combines a sensing circuit, logic conditions and a microcontroller sequence.

YOU NEED

- ☐ 10 kΩ NTC thermistor (sealed), 470 kΩ variable resistor, NPN transistor, 1 kΩ, LED + 330 Ω (stage 1)
- ☐ Microcontroller board or simulator (PIC, Arduino or micro:bit)
- ☐ 3 switches + 10 kΩ pull-downs (cold signal, enable, wind high)
- ☐ 3 LEDs + 330 Ω (beacon, fan, pump) or small motor via relay
- ☐ 6 V supply, multimeter, ice water, thermometer, stopwatch

CAPSTONE

This practical uses everything from E2 to E8. Work in stages. Keep the same pin numbers in your logic, flowchart, circuit and program.

Specification

1. Snow is made only when it is cold (pin 1) AND the operator enable switch is on (pin 2) AND the wind is NOT high (pin 3).
2. Before starting, the warning beacon (pin 5) flashes 3 times: on 0.5 s, off 0.5 s.
3. The fan (pin 6) starts. After 10 s the pump (pin 7) starts.
4. The cannon runs for 1 min, then the pump stops, then the fan stops.
5. The system then checks the conditions again, for ever.

Stage 1 · Sensing circuit

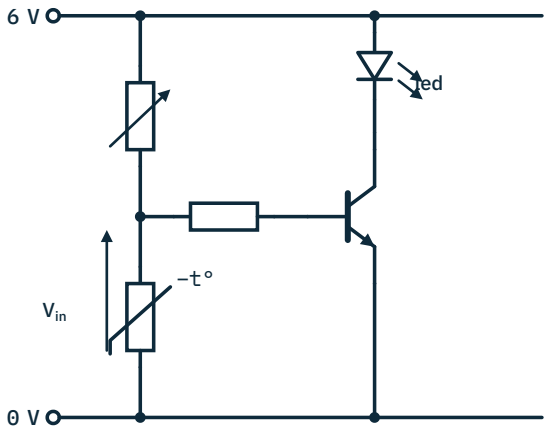

Cold signal: set the variable resistor to about 229 kΩ so the LED lights at 2 °C

Capstone: snow-making controller

Temperature	Predicted V_{out} (V)	Measured V_{out} (V)	Transistor	LED
10 °C				
5 °C				
2 °C				
0 °C				

Stage 2 · Sub-system diagram

Complete the sub-system diagram for the snow cannon. Add a feedback arrow if you think it is a closed-loop system, and explain why.

Stage 3 · Logic

Write the Boolean expression for 'make snow' using C (cold), E (enable) and W (wind high). Then draw the logic diagram with labelled inputs.

Capstone: snow-making controller

Stage 4 · Flowchart

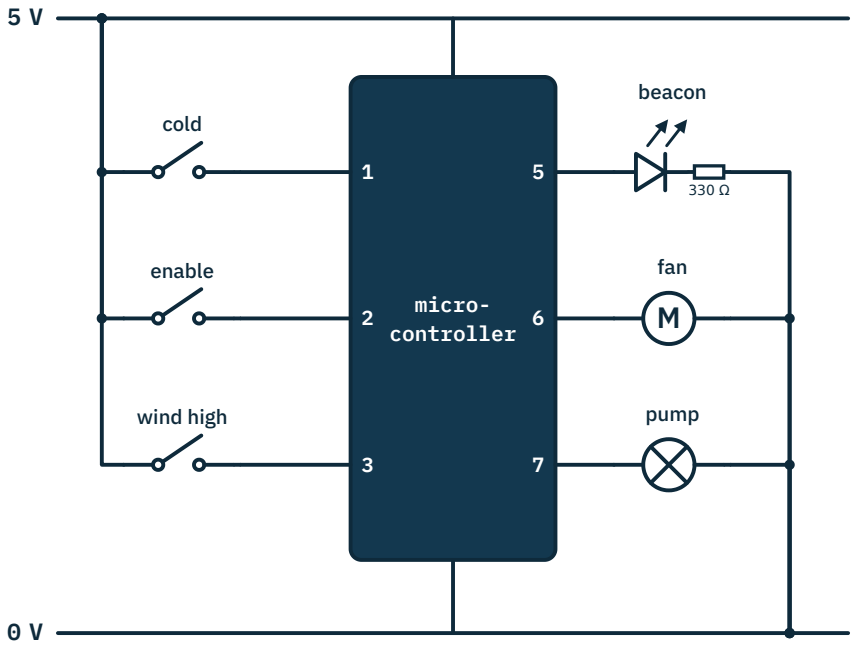

Microcontroller connections

Draw the flowchart. Include pin numbers, delay units, decisions with '?', Yes/No and arrows, a fixed loop and a continuous loop.

Capstone: snow-making controller

Stage 5 · Simulate and test

Test	Inputs (pins 1, 2, 3)	Predicted outputs	Seen in simulation	Time measured
1				
2				
3				
4				

Capstone: snow-making controller

Test results

Evaluate

EVALUATION FRAME

Specification point: The circuit should _____.

Result: When I _____, the _____ _____.

Cause and effect: This happened because _____, so _____.

Improvement: To fix the issue named in the task I would _____, so that _____.

Not for use during the assignment

Impacts

Describe one social, one economic and one environmental impact of snow-making at Cairnloch. Link one impact to greenhouse gases.