Ohm’s law

LEARNING INTENTION

We are learning to use Ohm's law to calculate voltage, current or resistance.

SUCCESS CRITERIA – I CAN

- ☐ write Ohm's law from the Data Booklet
- ☐ rearrange V = IR to find I or R
- ☐ substitute values with matching units
- ☐ give the answer with a suitable unit

Ohm’s law

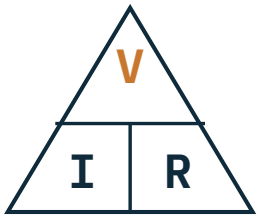

Cover the one you want

Ohm's law: the voltage across a resistor equals the current through it times its resistance.

V = IR (Data Booklet, page 5).

Rearranged: I = V/R and R = V/I.

Cover the quantity you want in the triangle to see the rearranged formula.

DATA BOOKLET page 5

V = IR

Ohm's law

Worked examples

WORKED EXAMPLE Finding current

1 GIVEN	2 FIND	3 FORMULA	4 SUBSTITUTE	5 ANSWER + UNIT
V = 12 V R = 2.4 kΩ	I	V = IR I = V/R	I = 12 ÷ 2.4	**I = 5.0 mA**

Volts ÷ kilohms gives milliamps.

WORKED EXAMPLE Finding resistance

1 GIVEN	2 FIND	3 FORMULA	4 SUBSTITUTE	5 ANSWER + UNIT
V = 9.0 V I = 15 mA = 0.015 A	R	V = IR R = V/I	R = 9.0 ÷ 0.015	**R = 600 Ω** (0.6 kΩ)

Here the current was changed to amps, so the answer is in ohms.

Ohm’s law

SHORT CIRCUIT

× WHAT EXAMINERS SAW

Pupils rearranged V = IR wrongly (e.g. I = R/V) or substituted mA as if it were A.

✓ THE FIX

Cover the quantity you want in the triangle: V on top, I and R below. Then check: a bigger V must give a bigger I.

Common errors in Ohm's law questions; course reports stress transposition and units.

Check your answer

More V → more I

If the voltage doubles, the current doubles (same R).

More R → less I

Double the resistance, halve the current.

Units

V ÷ kΩ → mA; V ÷ Ω → A; mA × kΩ → V.

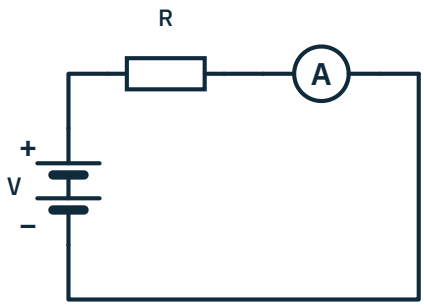

A simple Ohm's law circuit

Ohm’s law as a picture

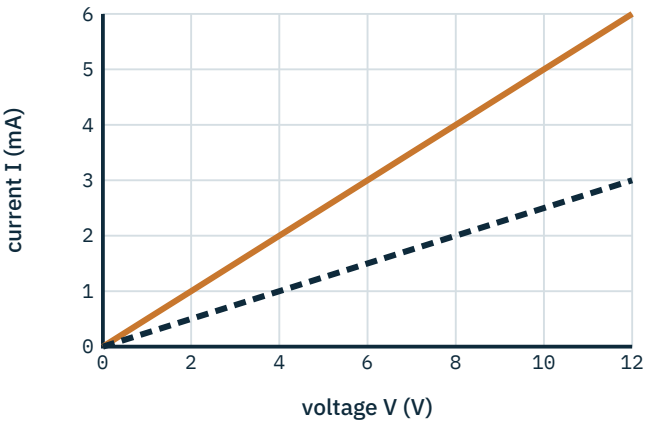

2 kΩ (steeper) and 4 kΩ (shallower)

Each straight line is one resistor. Pick any point, read V and I, and use R = V/I.

Steeper line → bigger current for the same voltage → smaller resistance.

Ohm's law

FOUR LINES THAT GET EVERY MARK

1. `V = I × R` — Write the formula
2. `I = 0.025 A R = 680 Ω` — Convert to A and Ω
3. `V = 0.025 × 680` — Substitute
4. `V = 17 V` — Answer with unit

WORKED EXAMPLE Finding voltage

1 GIVEN	2 FIND	3 FORMULA	4 SUBSTITUTE	5 ANSWER + UNIT
I = 25 mA = 0.025 A R = 680 Ω	V	V = IR	V = 0.025 × 680	**17 V**

WORKED EXAMPLE Reading a V–I graph

1 GIVEN	2 FIND	3 FORMULA	4 SUBSTITUTE	5 ANSWER + UNIT
graph: 6 V gives 3 mA	R	R = V/I	R = 6 / 0.003	**2000 Ω = 2 kΩ**

A steeper line on a V–I graph (I up, V across) means a smaller resistance.

REAL ENGINEERING · NORTHLIGHT MONITORING

Northlight's (fictional) lighthouse monitor measures battery current by measuring the small voltage across a 0.1 Ω resistor in the battery lead.

Ohm's law turns that voltage back into a current: 0.05 V across 0.1 Ω means 0.5 A is flowing.

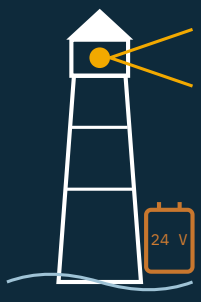

Ohm’s law

PROBE · QUICK CHECKS

1. Write Ohm's law. _____
2. V = 6 V, R = 2 kΩ. I? _____
3. I = 2 A, R = 3 Ω. V? _____

EXAM READY · 7 MARKS

1 A 9.0 V supply is connected across a 4.5 kΩ resistor. **Calculate** the current. **[2]**

2 A heater takes 5.0 A from a 230 V supply. **Calculate** its resistance. **[2]**

3 A current of 30 mA flows through a 220 Ω resistor. **Calculate** the voltage across it. **[2]**

4 The resistance in a circuit is doubled but the voltage stays the same. **State** the effect on the current. **[1]**