E2.3 Series circuits and Kirchhoff's 2nd law

LEARNING INTENTION

We are learning how current, voltage and resistance behave in series circuits.

SUCCESS CRITERIA – I CAN

- ☐ calculate total resistance in series
- ☐ state that current is the same everywhere in series
- ☐ use Kirchhoff's 2nd law to find a missing voltage
- ☐ state the effect of changing a resistance on current and voltages

Series rules

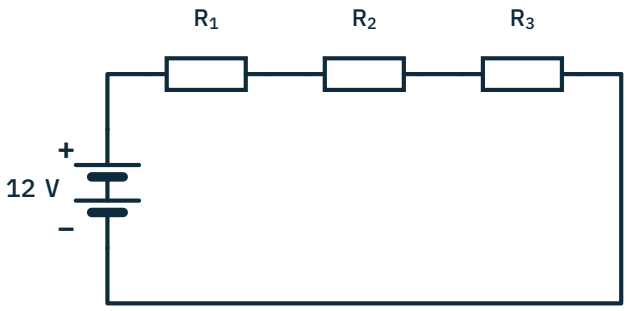

Three resistors in series

Components in **series** are joined end to end, in one loop.

Current is the same everywhere: there is only one path.

Resistance adds up: $R_t = R_1 + R_2 + R_3$.

Voltage is shared: the supply voltage equals the sum of the voltages across each component. This is **Kirchhoff's 2nd law**.

DATA BOOKLET page 5

$R_t = R_1 + R_2 + R_3 + \ldots$
resistors in series

$V_t = V_1 + V_2 + V_3 + \ldots$
Kirchhoff's 2nd law

$V = IR$
Ohm's law

WORKED EXAMPLE A series circuit

1 GIVEN	2 FIND	3 FORMULA	4 SUBSTITUTE	5 ANSWER + UNIT
$V_s = 12$ V $R_1 = 1$ kΩ, $R_2 = 2$ kΩ, $R_3 = 3$ kΩ	R_t, I, V_1, V_2, V_3	$R_t = R_1 + R_2 + R_3$ $I = V/R$ $V = IR$	$R_t = 1 + 2 + 3 = 6$ kΩ $I = 12 \div 6 = 2$ mA $V_1 = 2 \times 1 = 2$ V $V_2 = 4$ V, $V_3 = 6$ V	**$I = 2$ mA** $V_1 = 2$ V, $V_2 = 4$ V, $V_3 = 6$ V

Kirchhoff check: 2 + 4 + 6 = 12 V ✓

E2.3 Series circuits and Kirchhoff's 2nd law

SHORT CIRCUIT

× WHAT EXAMINERS SAW

Asked for the effect of increasing a resistance in a series circuit, many did not state what happens to the current or to a voltage.

✓ THE FIX

Increase any R → R_t increases → current decreases (same everywhere) → voltage across the other resistors decreases → voltage across the increased resistor increases.

Course report 2024 Q8(c).

I same

One path: the same current through every component.

R adds

$R_t = R_1 + R_2 + \ldots$

V shares

$V_s = V_1 + V_2 + \ldots$ (biggest R gets most V)

Why series matters

A voltage divider is a series circuit (unit E4). A series resistor protects an LED (E2.5). If one component in series breaks, the whole loop stops: that is why fairy lights in series all go out.

Sharing the voltage

KIRCHHOFF'S 2ND LAW IN FOUR STEPS

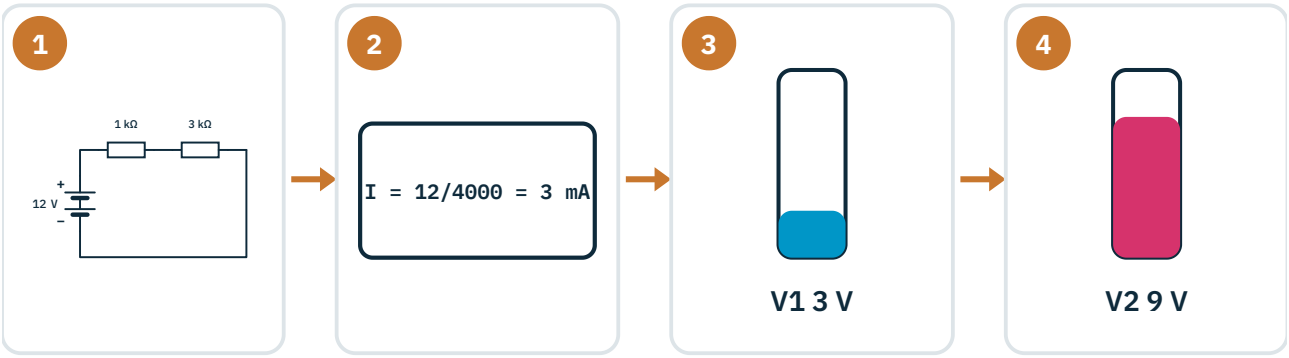

12 V shared by two resistors

Same current everywhere

Small R: small share

Big R: big share

WORKED EXAMPLE **Finding a missing resistor**

1 GIVEN	2 FIND	3 FORMULA	4 SUBSTITUTE	5 ANSWER + UNIT
V_s = 9 V I = 3 mA R_1 = 1 kΩ	R_2	$R_t = V_s/I$ $R_2 = R_t - R_1$	R_t = 9/0.003 = 3000 Ω R_2 = 3000 − 1000	**2000 Ω = 2 kΩ**

Series circuits and Kirchhoff's 2nd law

WORKED EXAMPLE Voltage across each resistor

1 GIVEN	2 FIND	3 FORMULA	4 SUBSTITUTE	5 ANSWER + UNIT
$V_s = 12$ V $R_1 = 1$ kΩ, $R_2 = 3$ kΩ	V_1, V_2	$I = V_s/R_t$ $V = IR$	$R_t = 4$ kΩ, $I = 3$ mA $V_1 = 0.003 \times 1000 = 3$ V $V_2 = 0.003 \times 3000 = 9$ V	**$V_1 = 3$ V, $V_2 = 9$ V** Check: 3 + 9 = 12 V

The bigger resistor takes the bigger share.

WRONG

$$V_1 = V_2 = 12 \text{ V}$$

Each resistor does NOT get the full supply in series.

RIGHT

$$V_1 + V_2 = 3 + 9 = 12 \text{ V} \checkmark$$

The voltages add up to the supply.

REAL ENGINEERING · PLATFORM LIGHTING AT KINLOCH

Old platform lights at Kinloch station (fictional) were wired in series. One failed bulb blacked out the whole platform.

Engineers rewired them in parallel (E2.4) so each lamp works on its own.



PROBE · QUICK CHECKS

1. In series, is current the same everywhere? _____
2. $R_1 = 2$ kΩ, $R_2 = 3$ kΩ in series. R_t? _____
3. $V_s = 9$ V, $V_1 = 4$ V. V_2? _____

Series circuits and Kirchhoff's 2nd law

EXAM READY · 8 MARKS

1 **State** Kirchhoff's 2nd law for a series circuit. **[1]**

2 Resistors of 2.2 kΩ, 4.7 kΩ and 1.1 kΩ are in series across 9.0 V. **Calculate** the current. **[3]**

3 **Calculate** the voltage across the 4.7 kΩ resistor in Q2. **[2]**

4 The 1.1 kΩ resistor is replaced with a larger one. **State** the effect on the current and on the voltage across the 2.2 kΩ resistor. **[2]**